ATK-DLRK3562JB

Hardware Reference Manual

V1.0

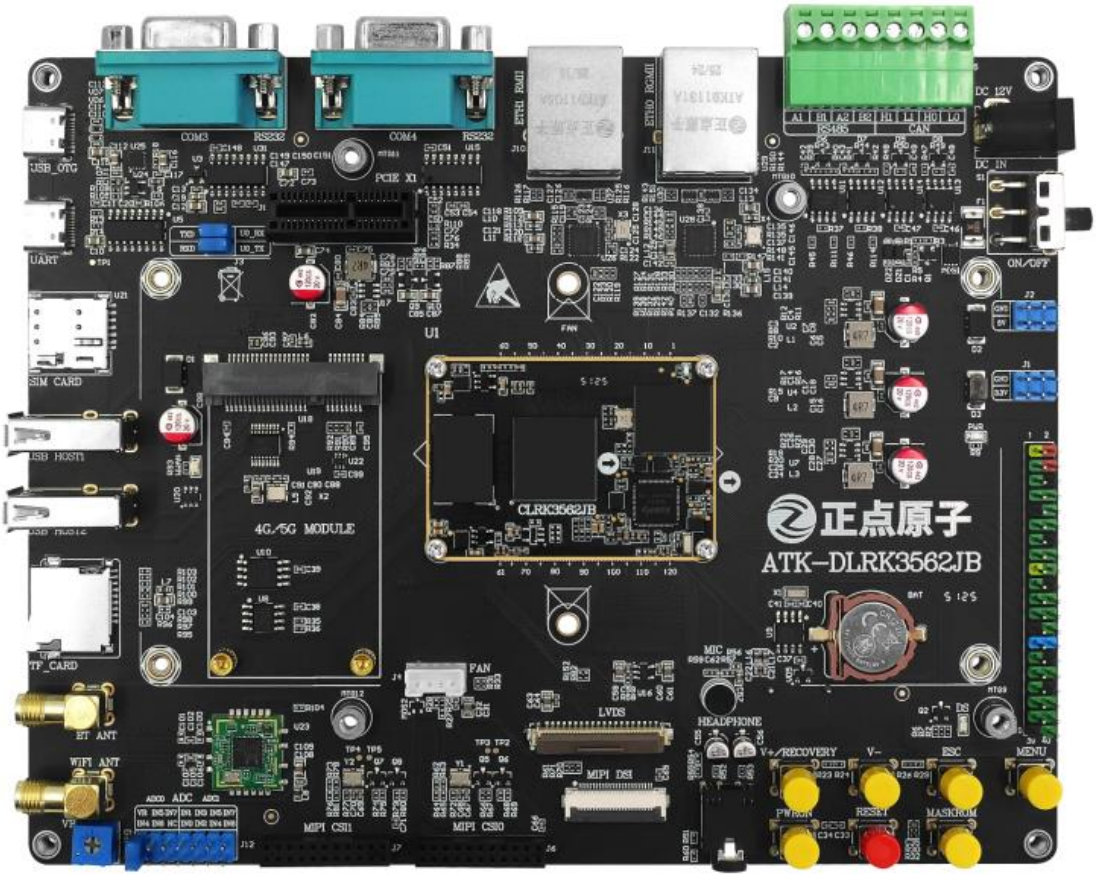

ALIENTEK

1. Shopping:

TMALL: https://zhengdianyuanzi.tmall.com

TAOBAO: https://openedv.taobao.com

2. Download

Address: http://www.openedv.com/docs/index.html

3. FAE

Website : www.alientek.com
Forum : http://www.openedv.com/forum.php
Videos : www.yuanzige.com
Fax : +86 - 20 - 36773971
Phone : +86 - 20 - 38271790

Disclaimer

The product specifications and instructions mentioned in this document are for reference only and subject to update without prior notice; Unless otherwise agreed, this document is intended as a product guide only, and none of the representations made herein constitutes a warranty of any kind. The copyright of this document belongs to Guangzhou Xingyi Electronic Technology Co., LTD. Without the written permission of the company, any unit or individual shall not be used for profit-making purposes in any way of dissemination.

In order to get the latest version of product information, please regularly visit the download center or contact the customer service of Taobao ALIENTEK flagship store. Thank you for your tolerance and support.

Revision History:

Version	Version Update Notes	Responsible person	Proofreading	Date
V1.0	release officially	ALIENTEK	ALIENTEK	2026.03

Catalogue

Preface 1
Chapter 1. Resources of ATK-DLRK3562JB board 2
1.1 Baseboard Resources of ATK-DLRK3562JB Development Board 2
1.2 Resources of ATK-CLRK3562JB Core Board 4
Chapter 2. Detailed Description of Development Board Baseboard Resources 6
Chapter 3. Detailed Explanation of the Development Board Base Schematic 12
3.1 Definition of Core Board Matching Interface 12
3.2 Notes on Core Board Docking Interface 13
3.3 DC Power Supply 15
3.4 Power Output Interface 16
3.5 Boot Mode Configuration 17
3.6 UART Debug Serial Port (System Debugging) 19
3.7 USB_OTG Interface (System Burning) 19
3.8 Function Keys (Reset, Sleep/Wake-up, Burning, User) 20
3.9 LED Indicator 22
3.10 Hardware Version Configuration 23
3.11 Fan Interface 23
3.12 Adjustable Potentiometer 24
3.13 RS232 Interface 25
3.14 RS485 Interface 25
3.15 CAN Interface 26
3.16 RTC Clock Circuit 27
3.17 EEPROM Storage 28
3.18 SPI NOR FLASH Storage 28
3.19 USB HOST Interface 29
3.20 Wi-Fi & Bluetooth Interface 30
3.21 TF Card Interface 31
3.22 PCIE Interface 32
3.23 Audio Interface 33
3.24 MIPI DSI Interface 34
3.25 LVDS Interface 35
3.26 MIPI CSI Interface 36
3.27 100Mbps Ethernet Interface 37
3.28 Gigabit Ethernet Interface 38
3.29 Expanded IO Pin Header Group 39
Chapter 4. Precautions for Using the Development Board 41

Preface

This manual introduces the hardware resources and hardware design of the ALIENTEK ATK-DLRK3562JB development board. It elaborates on the functional circuit design and precautions of all on-board interfaces of the development board, serving as a reference for users' product design.

If higher protection performance is required for the functional circuits of users' products, the protection capability and reliability of the product shall be enhanced in a targeted manner according to the requirements of actual application scenarios.

Chapter 1. Resources of ATK-DLRK3562JB board

ALIENTEK has currently designed a variety of STM32, Linux and FPGA development boards. These development boards consistently rank first in Taobao sales volume all year round, with cumulative shipments exceeding several million units.

The ATK-DLRK3562JB development board is a high-performance and multi-functional board designed by ALIENTEK based on Rockchip RK3562J processor. It adopts a board-to-board connection scheme of baseboard plus core board.

Below is a preliminary introduction to the hardware resources of the baseboard and core board of the ATK-DLRK3562JB development board.

1.1 Baseboard Resources of ATK-DLRK3562JB Development Board

First, let us take a look at the baseboard resource diagram of the ATK-DLRK3562JB development board, as shown in the figure below.

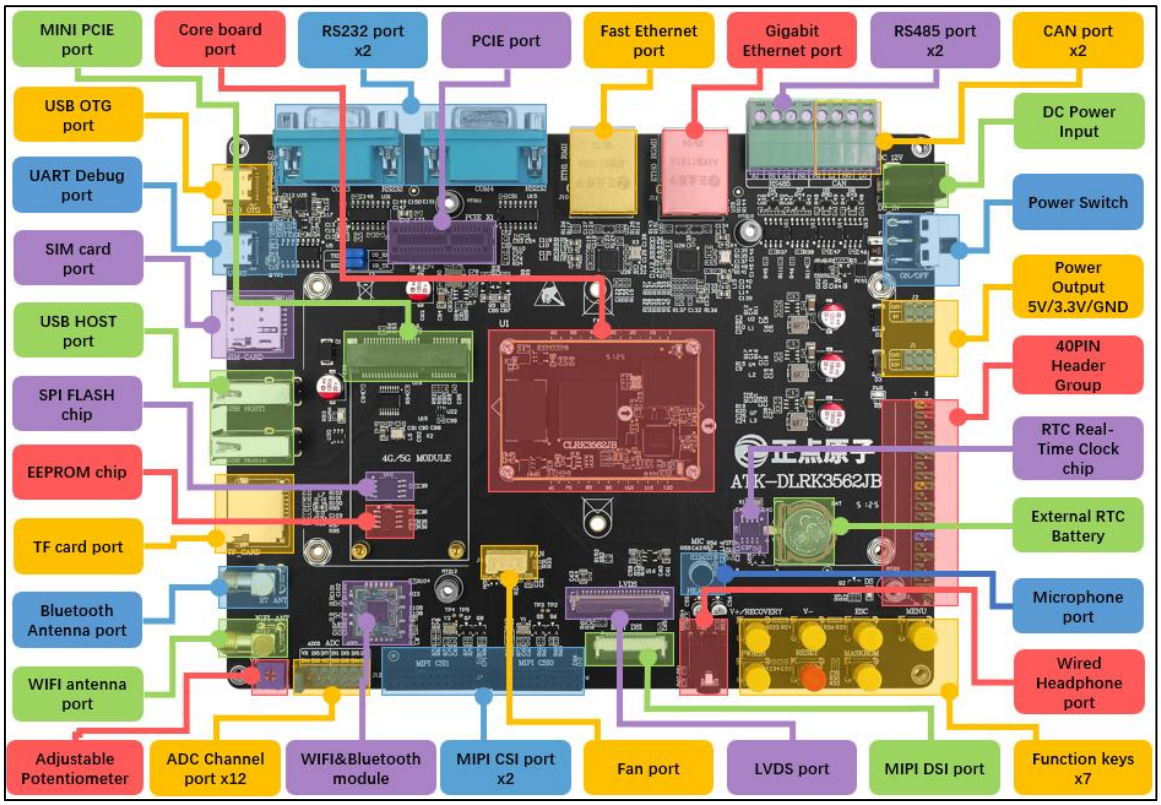

Figure 1.1-1 Baseboard Resources of ATK-DLRK3562JB Development Board

It can be seen from the above figure that the baseboard of the ATK-DLRK3562JB development board is equipped with **abundant hardware resources** and expanded with a rich variety of interfaces and functional modules.

The overall dimension of the development board is 180mm×140mm. Its layout is fully designed with humanization in mind, making it convenient for development and application.

The on-board resources of the ALIENTEK ATK-DLRK3562JB development board baseboard are listed as follows:

- 1 set of core board connector interface, supporting ATK-CLRK3562JB core board

- 1 channel DC12V DC power input interface
- 1 power switch to control the power supply of the entire board
- 1 set of 5V power output port
- 1 set of 3.3V power output port
- 2 channels CAN interface
- 2 channels RS485 interface
- 1 channel Gigabit Ethernet interface
- 1 channel Fast Ethernet interface
- 2 RS232 interfaces
- 1 channel USB OTG interface, Type-C
- 1 channel UART debug serial port, Type-C
- 1 SIM card interface
- 2 channels USB2.0 HOST interfaces
- 1 PCIe interface, PCIe 2.0
- 1 MIPI PCIe interface
- 1 TF card interface
- 1 BT Bluetooth antenna interface
- 1 Wi-Fi antenna interface
- 1 adjustable potentiometer
- 1 ADC channel selection pin header for ADC voltage acquisition
- 1 fan interface
- 2 MIPI CSI camera interfaces
- 1 MIPI DSI display interface
- 1 LVDS display interface
- 1 4G module operation indicator LED
- 1 blue power indicator LED
- 1 red user indicator LED
- 1 headphone interface, supporting 3-segment earphones
- 1 electret microphone (MIC)
- 7 function keys
- 1 small speaker (on the back of the board)
- 1 EEPROM chip, 8KB
- 1 SPI FLASH chip, 16MB
- 1 RTC real-time clock chip
- 1 RTC button battery holder with battery
- 1 set of 2×20P pin headers with 2.54mm pitch, leading out dozens of IO ports

The features of the baseboard of the ALIENTEK ATK-DLRK3562JB development board are as follows:

1. **Rich Interfaces**

The development board is equipped with a variety of standard interfaces, facilitating the experimentation and development of various peripheral devices.

2. **Flexible Design**

It adopts a core board plus baseboard architecture. Most on-board resources can be flexibly configured to meet application requirements under different scenarios.

The core board leads out almost all communication interfaces of the RK3562J processor, including UART, I2C, I2S, SPI, CAN, SDMMC, USB2.0, USB 3.0 / PCIe 2.0, LVDS / MIPI DSI, MIPI CSI, ADC, Fast Ethernet, Gigabit Ethernet and more, which greatly facilitates user expansion and application.

3. **Abundant On-board Resources**

It integrates a Fast Ethernet controller, Gigabit Ethernet controller, PCIe 2.0 interface, EEPROM memory chip and various interface chips, satisfying a wide range of application demands.

4. **Humanized Design**

All interfaces are marked with silk screen printing for clear identification; commonly used peripherals are highlighted with large silk screen labels for easy location; the interfaces are arranged in a reasonable layout for convenient use.

1.2 Resources of ATK-CLRK3562JB Core Board

Next, let's take a look at the resources of the ATK-CLRK3562JB core board, as shown in the figure below.

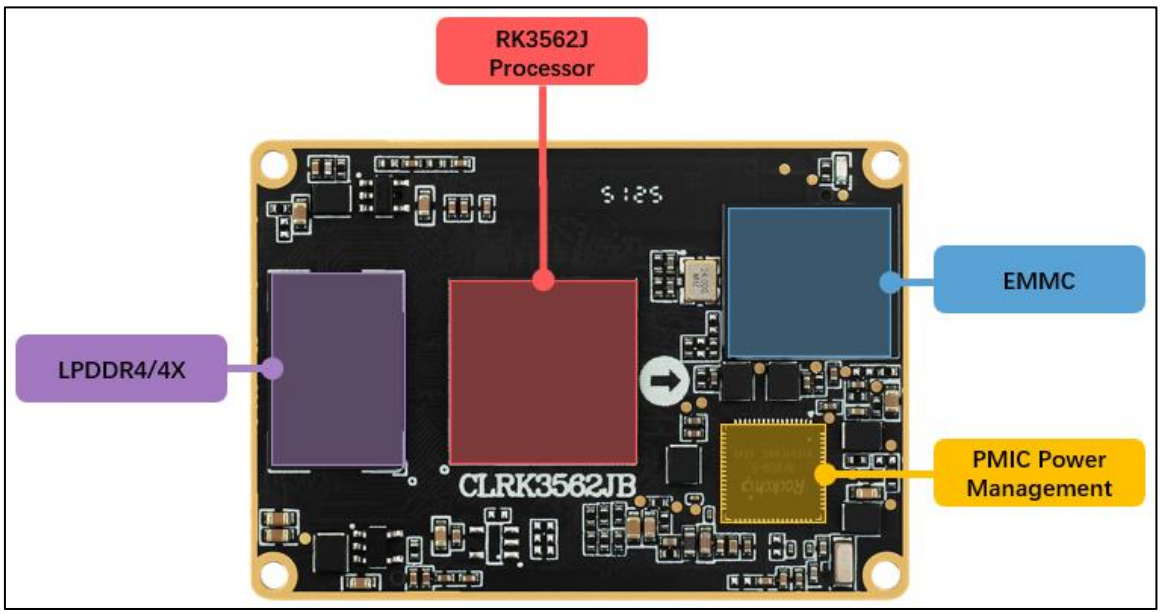

Figure 1.2-1 Core Board Resources of ATK-CLRK3562JB Core Board

The overall dimensions of the core board are 50mm × 35mm, featuring an ultra-compact size. It adopts a board-to-board surface-mount connector with a 0.5mm pin pitch. The combined height when mated with the baseboard BTB connector is 3mm, making it easy to be applied in various projects.

The on-board resources of the ALIENTEK ATK-CLRK3562JB core board are as follows:

- **CPU**: RK3562J processor, quad-core Cortex-A53 (up to 1.8GHz), single-core Cortex-M0 (200MHz)
- **GPU**: 900MHz
- **NPU**: 1GHz, 1.0 TOPS
- **Memory LPDDR4x**: 1GB / 2GB optional
- **Storage eMMC**: 8GB / 32GB optional
- High-stability PMIC power management chip

- Two 2×60P BTB connectors, total 240 pins

ALIENTEK ATK-CLRK3562JB core board features:

1. **Compact Size**

The core board measures only 50mm×35mm, making it suitable for integration into various projects.

2. **Easy Integration**

It adopts pluggable BTB connectors, which can be conveniently integrated into customers' PCBs. It supports simple replacement and facilitates maintenance and testing.

3. **Rich On-board Resources**

Equipped with LPDDR4/4x memory and eMMC storage in multiple capacity options, it can meet the requirements of a wide range of application scenarios.

4. **Stable Performance**

The core board adopts an 8-layer PCB design with independent ground and power layers. All critical signals are routed with equal-length traces and components are arranged rationally.

In addition, a dedicated high-efficiency Rockchip PMIC power management chip is used for stable power supply, ensuring long-term stable and reliable operation of the core board.

5. **Humanized Design**

IO ports are led out by functional partitions to facilitate PCB layout and wiring.

6. **Anti-reverse Insertion Design**

The BTB connectors are designed with offset positioning to prevent reverse insertion.

Chapter 2. Detailed Description of Development Board

Baseboard Resources

The ATK-DLRK3562JB development board is equipped with abundant multi-functional interfaces. This section introduces the hardware resources of each part on the baseboard of the ATK-DLRK3562JB development board, enabling users to have a comprehensive understanding of the baseboard hardware configuration.

Starting from the power input port at the upper right corner of the baseboard resource block diagram, each functional interface is introduced in clockwise order as follows:

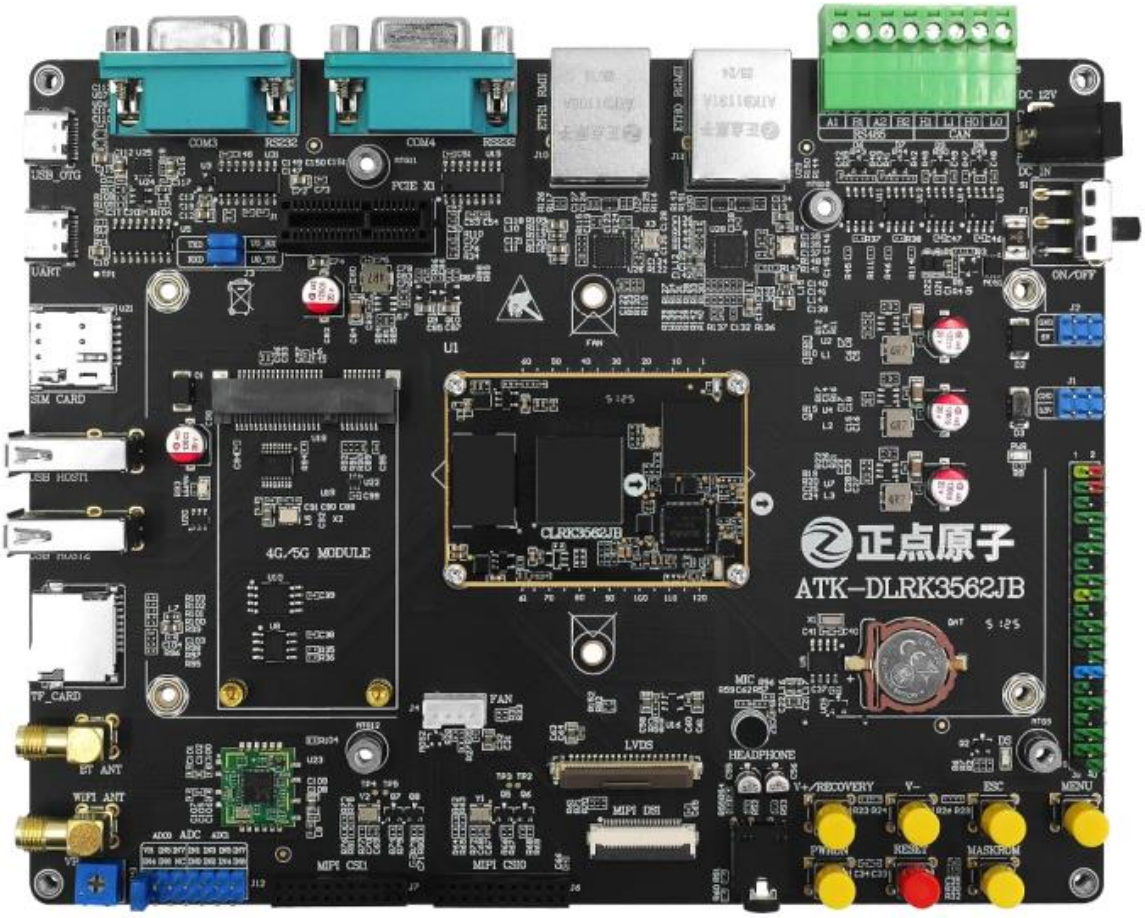

Figure 1.2-1 ATK-DLRK3562JB development board

1. DC Power Input

The development board is equipped with one DC power input interface (DC_IN), which adopts a standard DC power jack. A 12V DC power supply is required to power the board.

The board integrates multiple DC-DC power chips to provide efficient and stable power voltages such as 5V and 3.3V.

2. Power Switch

The development board is fitted with one power switch (S1). This switch controls the power supply of the entire board.

It is a two-position slide switch. Sliding it upward turns on the power to supply the whole development board, and the power indicator (PWR) lights up.

Sliding it downward cuts off the power of the entire board, and the power indicator (PWR) turns off accordingly.

3. 5V Power Output

The development board is equipped with a set of 5V power output pin headers (2×3, J2), which is used to supply 5V power to external devices and features **reverse connection protection**.

Users may encounter difficulties in experiments without an available 5V power supply. With this set of 5V pin headers, a convenient 5V power source is readily available.

4. 3.3V Power Output

The development board integrates a set of 3.3V power output pin headers (2×3, J1), designed to provide 3.3V power for external peripherals with reverse connection protection.

This power output can be used when a 3.3V power supply is required during experiments.

Note that high-power devices are not allowed to be connected. The recommended maximum current shall not exceed 1000mA. It is generally used for low-power devices such as sensors and small modules.

5. Led-out IO Pin Header Group

The development board is provided with a led-out IO pin header group (J9) of 2×20PIN, leading out a total of 28 IO pins, as well as 5V, 3.3V and GND pins.

It should be noted that these led-out IO ports are not independently usable; most of them are multiplexed with pins of the on-board functional circuits on the development board.

When using these led-out IO pins, users shall check for conflicts with on-board functional circuits, such as pull-up/pull-down resistors or IOs already connected to other functional chips. Such conflicts may cause incorrect IO level values and communication failures of external modules.

If affected by existing on-board circuits, it is necessary to temporarily desolder the related on-board circuits and chips for normal use.

6. Function Keys

The development board is equipped with 7 function keys, namely **V+/RECOVERY**, **V-**, **ESC**, **MENU**, **PWRON**, **RESET** and **MASKROM**.

Among them, four keys including V+/RECOVERY, V-, ESC and MENU are designed for upper-layer applications, corresponding to Volume Up, Volume Down, Exit and Menu respectively.

The PWRON, RESET and MASKROM keys are dedicated to system functions.

The PWRON key controls power on/off of the PMIC power management chip on the core board. Press and hold it to power off the core board, and short press to power it on again. It also supports system sleep and wake-up functions.

The RESET key is a reset button used to reset the entire development board.

The MASKROM key is used for system firmware burning.

7. Microphone

The development board integrates one microphone input interface (MIC). The RK809-5 PMIC chip on the core board integrates audio codec functions. The on-board microphone is connected to the MIC input pin of RK809-5, which can realize audio recording function.

8. Headphone Interface

The development board is equipped with a 3.5mm headphone jack, which is connected to the headphone port of RK809-5. It supports 3-segment earphones and does **not** support recording via headset microphone.

9. MIPI DSI Interface

The development board provides one 4-lane MIPI DSI display interface, which can be connected to ALIENTEK MIPI LCD touch screens. It is compatible with MIPI screens in resolutions: 5.5-inch 720×1280, 5.5-inch 1080×1920, and 10.1-inch 800×1280.

10. LVDS Interface

The development board is equipped with one 4-lane LVDS interface for connecting ALIENTEK LVDS LCD touch screens, and it supports the 10.1-inch 1280×800 LVDS display.

This interface is multiplexed with the MIPI DSI interface, and only one of them can be used at a time.

11. MIPI CSI Interface

The development board integrates two 4-lane MIPI CSI camera interfaces, supporting ISP-enabled MIPI CSI cameras with up to 13MP pixel input.

It is used for image acquisition and processing, and the captured images can be delivered to the NPU for AI model computing and analysis.

This interface is compatible with ALIENTEK IMX335 and IMX415 camera modules. When inserting the camera module, the lens should face outward.

12. Fan Interface

The development board is equipped with one fan interface. According to heat dissipation requirements, a small fan can be connected to cool down the core board processor, storage chips and other devices for user testing.

The fan interface circuit outputs 12V power externally. Before connecting a fan, please check the fan's operating voltage range and the position of the control IO pin.

13. ADC Channel Selection Pin Header Group

The development board has a 2×7P pin header group with a 2.54mm pitch, which is used for ADC channel selection. It is connected to the adjustable potentiometer for voltage acquisition.

14. Adjustable Potentiometer

The development board is equipped with one adjustable potentiometer with a resistance of 10KΩ, which is used for ADC voltage acquisition testing.

15. Wi-Fi Antenna Interface

The development board provides one Wi-Fi antenna interface, which supplies Wi-Fi wireless signal for the on-board Wi-Fi & Bluetooth combo module.

Since the module supports 5.8GHz Wi-Fi band, it is recommended to use a 2.4G/5.8G dual-band antenna when using the Wi-Fi function.

16. Bluetooth Antenna Interface

The development board is equipped with one Bluetooth antenna interface, which provides Bluetooth wireless connection signal for the on-board Wi-Fi & Bluetooth combo module. This interface can be connected to a 2.4G antenna.

17. TF Card Interface

The development board is equipped with a standard TF card interface (TF_CARD) in compact form factor, driven in SDMMC mode.

This TF card interface meets the requirement of large-capacity data storage.

18. USB HOST Interface

The development board integrates two USB Type-A ports, which can be connected to USB flash drives, keyboards, mice, USB cameras and other peripheral devices.

The USB bus of the RK3562J processor is expanded into 4 USB HOST channels via an on-board USB HUB chip.

One channel is used for 4G/5G module connection, another for Wi-Fi & Bluetooth module, and the remaining two channels are led out through USB Type-A connectors.

19. Mini PCIE Interface

The development board is equipped with one Mini PCIE socket, which essentially adopts a USB interface and is connected to the on-board USB HUB chip.

This interface can be connected to 4G or 5G RedCap modules, such as Gosuncn ME3630 4G module, Quectel EC20 4G module, Fibocom 5G RedCap FG132 module and other models.

It should be noted that for 5G RedCap modules, the development board is currently only compatible with the Fibocom 5G RedCap FG132 module. If users adopt modules of other brands, they need to check the hardware compatibility of this interface.

20. SIM Card Interface

The development board is equipped with one SIM card interface. If a 4G/5G module is used for wireless data transmission, a Nano SIM card needs to be inserted into this interface.

21. USB Debug Serial Port

The development board provides one USB debug serial port with a USB Type-C connector, which is used for inputting and outputting system debugging information.

During use, ensure that the jumper cap of J3 is installed. The pins marked TXD and RXD on J3 are the two data lines of the USB-to-serial chip (CH343G).

U0_RX and U0_TX correspond to the RXD and TXD data lines of the RK3562J UART0 serial port.

They are connected via the jumper cap to realize serial communication between the RK3562 development board and a computer, enabling board debugging through this serial port.

22. USB_OTG Interface

The development board is equipped with one USB OTG interface adopting a USB Type-C connector, which serves as the system firmware downloading interface.

This interface implements the USB OTG function via the USB Type-C controller chip **FUSB302MPX**.

The development board can be connected to a PC with a USB Type-C cable, working as a **Slave** device for system firmware burning.

It can also connect other USB devices such as USB flash drives via a USB OTG cable, where the development board acts as a **Host** to perform read and write operations on the connected devices.

23. RS232 Interface

The development board integrates two RS232 interfaces with standard DB9 female connectors, supporting RS232 data receiving, transmitting and communication.

24. PCIe Interface

The development board is equipped with one PCIe interface with 36 pins, supporting the PCIe 2.0 protocol. It can be connected to PCIe peripheral devices, such as PCIe Wi-Fi modules, PCIe solid-state drives, and PCIe Gigabit Ethernet modules.

25. Fast Ethernet Interface

The development board provides one Fast Ethernet interface, supporting 10M/100M transmission rates.

26. Gigabit Ethernet Interface

The development board is equipped with one Gigabit Ethernet interface, supporting transmission rates of 10M/100M/1000M.

27. RS485 Interface

The development board integrates two RS485 bus interfaces (RS485), which are built-in with ESD protection.

For RS485 communication, connect port A of the board to port A of the peer device, and port B of the board to port B of the peer device.

28. CAN Interface

The development board is equipped with two CAN bus interfaces, featuring built-in ESD protection.

For communication with CAN devices, the on-board CANH pin must be connected to the CANH pin of the peer device, and the on-board CANL pin must be connected to the CANL pin of the peer device.

29. EEPROM

The development board is equipped with an EEPROM memory chip, model **AT24C64**, with a capacity of 8KB. It adopts the IIC interface and is available for user storage and testing applications.

30. SPI NOR FLASH

The development board integrates an SPI NOR FLASH memory chip, model **W25Q128**, with a capacity of 16MB. It uses the SPI interface and is provided for user storage and testing use.

31. RTC Real-Time Clock

The development board is equipped with one RTC real-time clock chip **AT8563T** via the IIC interface, available for user testing.

32. LED Indicators

The development board has three LED indicators: **PWR**, **DS**, and **WWAN**.

- **PWR**: Power indicator. It stays steadily on when the 3.3V power supply of the board works normally.
- **DS**: User indicator. By default in the factory system, it acts as a system heartbeat light; a heartbeat blinking state indicates normal system operation.
- **WWAN**: 4G/5G module activity indicator, used to indicate the network connection status.

33. Led-out IO Pin Header Group

The development board is equipped with a led-out IO pin header group (J9) of **2×20 pins**, bringing out a total of 28 IO pins, as well as 5V, 3.3V and ND pins.

It should be noted that these led-out IO ports cannot be used independently; most of them are multiplexed with pins of the on-board functional circuits of the development board.

Therefore, when using these led-out IOs, users need to check for conflicts with on-board functional circuits, such as the presence of pull-up/pull-down resistors or IOs already connected to other functional chips.

Such conflicts may result in incorrect IO level values and communication failures of external modules.

If affected by the conflict, the relevant on-board circuits and chips on the development board need to be temporarily desoldered for normal use.

Chapter 3. Detailed Explanation of the Development Board Base Schematic

This section breaks down and explains each circuit part of the ATK-DLRK3562JB development board baseboard. It describes the general design functions and potential precautions of each circuit module, serving as a reference for product hardware design.

The hardware circuit of the development board may be updated, optimized and iterated in version as required. If users develop product projects by referring to these circuits, they shall evaluate the compatibility with project requirements and conduct circuit optimization and protection design accordingly.

3.1 Definition of Core Board Matching Interface

The development board baseboard adopts two 2×60P board-to-board SMT connectors with a pin pitch of 0.5mm to connect with the core board, enabling easy plugging and unplugging.

The pin definition of the core board matching interface on the baseboard is shown in the figure below. For detailed pin assignments, please refer to the development board base schematic and the ATK-CLRK3562JB Core Board Interface Datasheet.

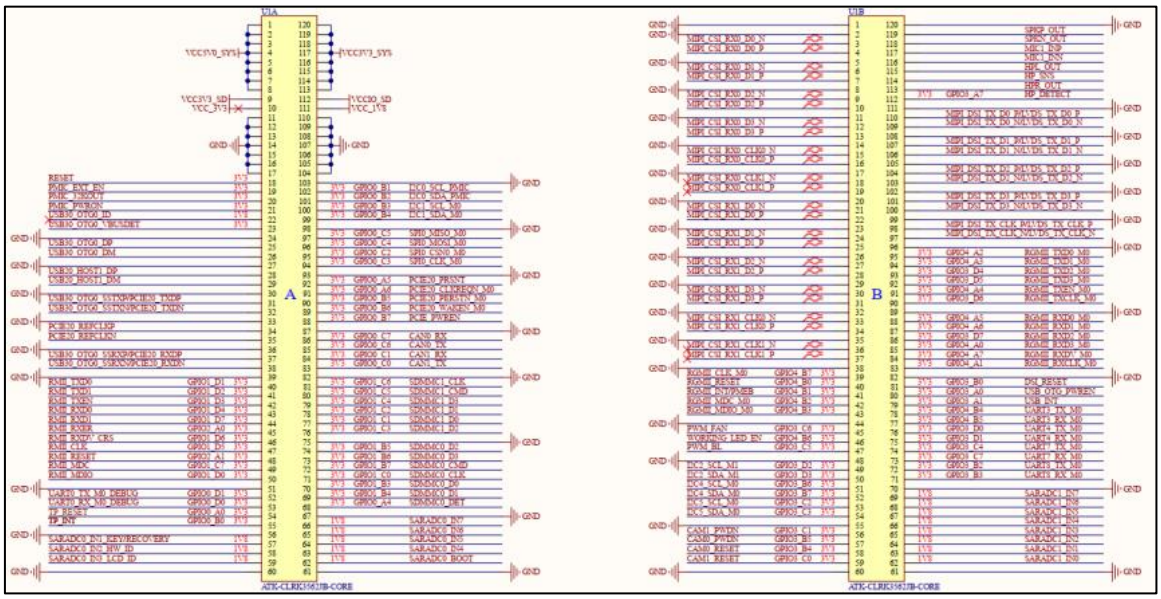

Figure 3.1-1 Pin Definition of Baseboard-to-Core Board Connector

The baseboard uses a pair of **BTB female connectors**, model **AXK5A2137YG**.

There are two BTB connectors in the diagram, marked as No. A and No. B respectively.

These numbers correspond to core board connectors J1 and J2: **A ↔ J1, B ↔ J2**.

Only in this way can the baseboard be correctly mated with the core board.

During docking, ensure pin numbers **1~120** correspond one-to-one.

The completed schematic symbols and PCB footprints are provided in the development board library files, which can be directly called and used in user hardware design.

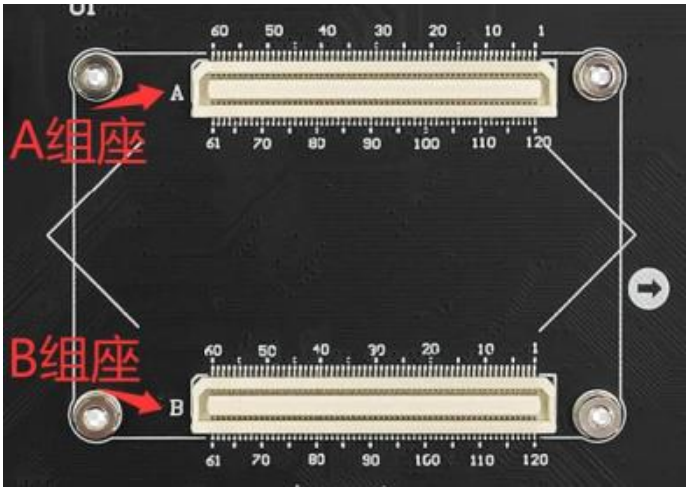

Figure 3.1-2 Baseboard-to-Core Board Packaged Connector

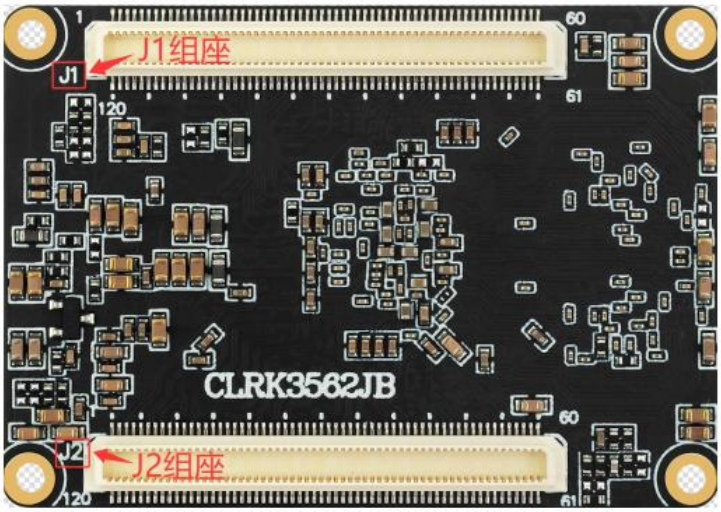

Figure 3.1-3 Core Board Connector

3.2 Notes on Core Board Docking Interface

The following specifies the precautions when designing products with this core board interface.

1. Description of power input and output of the ATK-CLRK3562JB core board;

Power Definition	Power Direction	Voltage Value	Function	Usage Instructions
VCC5V0_SYS	Input to Core Board	5.0V	Power Supply to Core Board	The core board power supply is **5.0V/2A**. It is recommended that the voltage error be within **200mV**, and the maximum voltage shall **not exceed 5.5V**.
VCC3V3_SYS	Input to Core Board	3.3V	Power Supply to Core Board	The core board power supply is **3.3V/2A**. It is recommended that the

				voltage error be within **200mV**, and the maximum voltage shall **not exceed 5.5V**.
VCC3V3_SD	Core Board Output	3.3V	SD Card Power Supply	Power supply for SD card
VCCIO_SD	Core Board Output	3.3V/1.8V	SD Card Signal Power Supply	SD card signal IO power domain
VCC_3V3	Core Board Output	3.3V	The core board provides an external 3.3V general-purpose power supply.	The recommended maximum operating current shall not exceed 300mA.
VCC_1V8	Core Board Output	1.8V	The core board provides an external 1.8V general-purpose power supply.	The recommended maximum operating current shall not exceed 300mA.

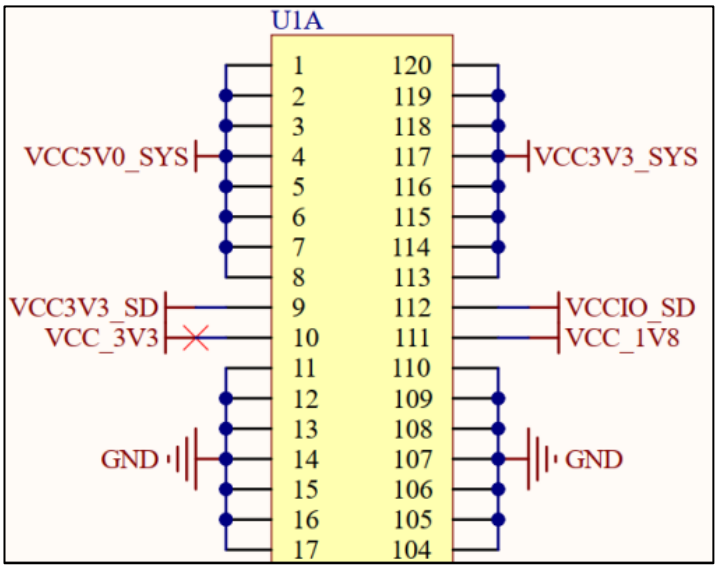

Figure 3.2-1 Definition of Core Board Power Input and Output

3.3 DC Power Supply

The ATK-CLRK3562JB core board requires two channels of DC power supply, which are 5.0V/2A and 3.3V/2A respectively.

The actual power consumption depends on the number of peripherals used and the design of peripheral circuits, which shall be subject to actual application requirements.

The development board is integrated with a 12V DC power supply circuit, and its schematic diagram is shown in the figure below.

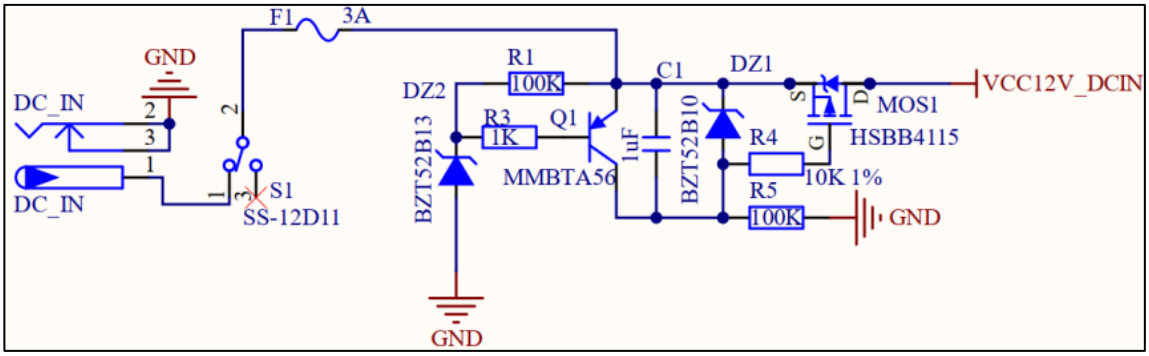

Figure 3.3-1 12V DC Power Supply

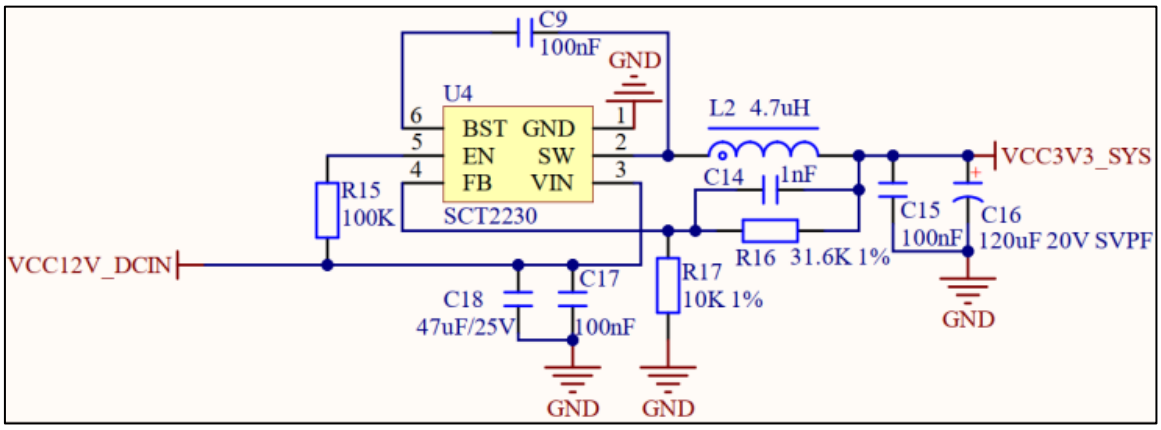

Figure 3.3-2 3.3V Power Supply

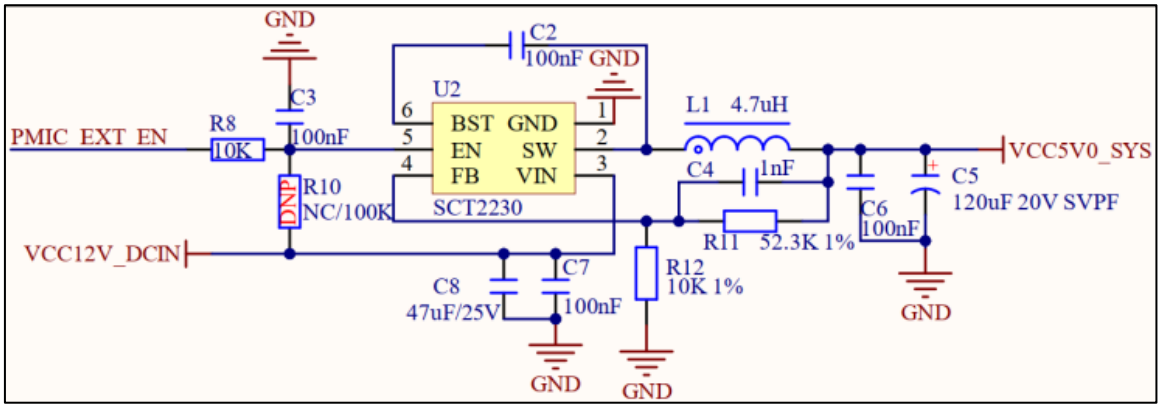

Figure 3.3-3 5V Power Supply

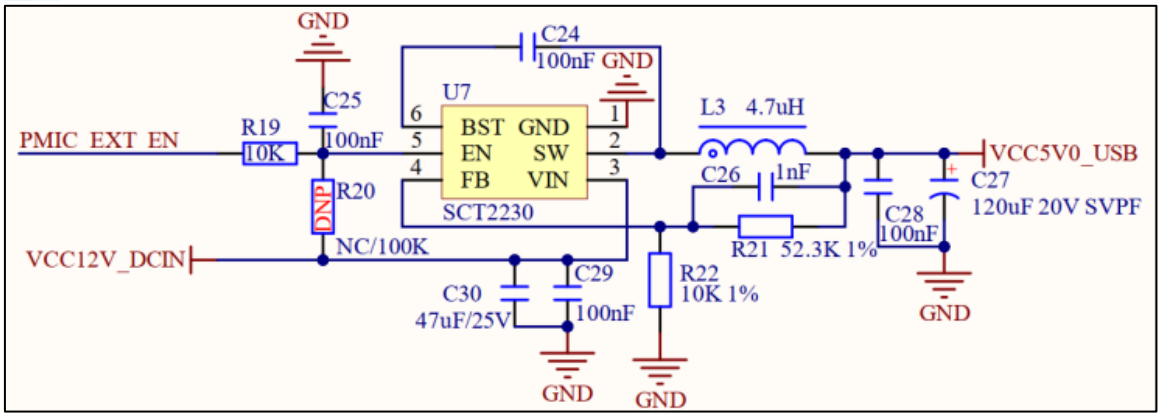

Figure 3.3-4 USB Device 5V Power Supply

Figure 3.3.1 shows the 12V DC power input interface of the entire development board, which features **reverse connection protection** and 12V voltage regulation functions.

Figure 3.3.2 shows the 3.3V power supply for the baseboard and core board, which also serves as the main power supply of the core board.

The input 12V power is converted into a 3.3V output by the DC-DC chip **SCT2230** to supply power to the baseboard and core board. This DC-DC chip supports a maximum output current of 3A.

Figure 3.3.3 shows the 5V power supply for the baseboard and core board, which is also the main power supply of the core board.

The input 12V DC power is converted into a 5V output by the DC-DC chip SCT2230 to power the core board. Meanwhile, it also supplies power to 5V-powered peripherals on the baseboard, such as the display screen, CAN communication and other peripheral circuits.

It should be noted that the **EN pin** of the 5V power chip SCT2230 in the circuit is enabled by the **PMIC_EXT_EN** pin.

This pin is led out from the core board PMIC power management chip **RK809-5**, acting as an external power enable signal with a high level of 3.3V.

After the core board power management chip RK809-5 is normally supplied with 3.3V power, RK809-5 will automatically pull up the PMIC_EXT_EN pin to 3.3V, thereby enabling other external required power supplies.

This design is referenced from Rockchip official evaluation board design, and users are recommended to adopt the same design scheme.

Figure 3.3.4 shows the 5V power supply for USB devices.

The development board is equipped with two on-board USB Type-A connectors for connecting external USB devices, and this circuit provides independent power supply for external USB devices.

3.4 Power Output Interface

The development board is equipped with two sets of power output interfaces, whose schematic diagram is shown in the figure below.

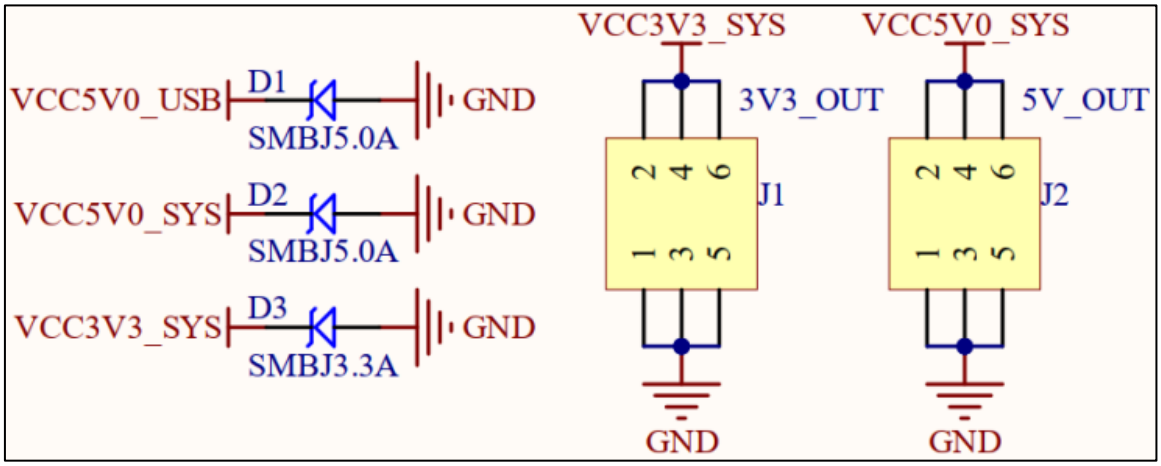

Figure 3.4-1 Power Output Interface

3V3_OUT and **5V_OUT** in the figure are the 3.3V and 5V power output interfaces respectively. The development board can supply 3.3V and 5V power to external devices, facilitating user expansion and application.

D2 and D3 in the circuit are TVS diodes. They can effectively prevent damage to the development board caused by unstable external power or loads connected to VOUT, especially when inductive loads such as motors, relays and solenoid valves are externally connected to the board. Meanwhile, they can also protect the development board to a certain extent from damage caused by reverse connection of external power supply.

The development board is originally equipped with a **DC 12V-1A power adapter**, which has limited power supply capability. It is recommended not to connect high-power devices to these power output interfaces.

3.5 Boot Mode Configuration

The system boot sequence of the core board processor RK3562J is configured via the SARADC0_BOOT pin. The preset boot order is determined according to the initial ADC value of this pin.

Users can adjust the pull-up/pull-down resistor values according to actual product requirements to modify the corresponding Config Level settings.

By default, the development board sets the system boot sequence to Config7, with the priority order: **eMMC → SD Card → USB**. No modification to this configuration is required for ordinary use.

Upon power-on, the processor first loads the system firmware from the eMMC. If it fails, it will attempt to load from the SD Card. If both attempts fail, the processor enters USB mode for system firmware burning.

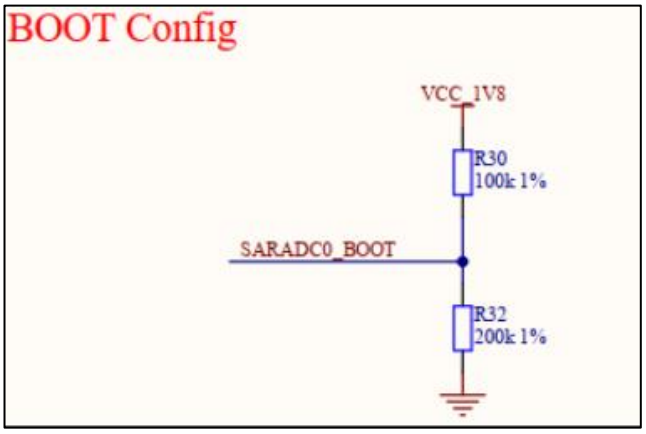

Figure 3.5-1 Boot Mode Configuration

BOOT_Config Maskrom/Update Key Value

Config Table for SARADC0_BOOT

Item	*Rup*	*Rdown*	*ADC Value*	*Boot Mode*
Config1	DNP	100K	0	USB (Maskrom mode)
Config2	100K	12K	114	
Config3	100K	27K	228	FSPI--USB
Config4	100K	51K	342	
Config5	100K	82K	456	
Config6	100K	120K	570	EMMC--USB
Config7	100K	200K	683	EMMC--SD Card--USB
Config8	100K	330K	796	SD Card--USB
Config9	100K	820K	910	
Config10	100K	DNP	1023	FSPI--EMMC--SD Card--USB

Figure 3.5-2 Boot Mode Configuration Parameters

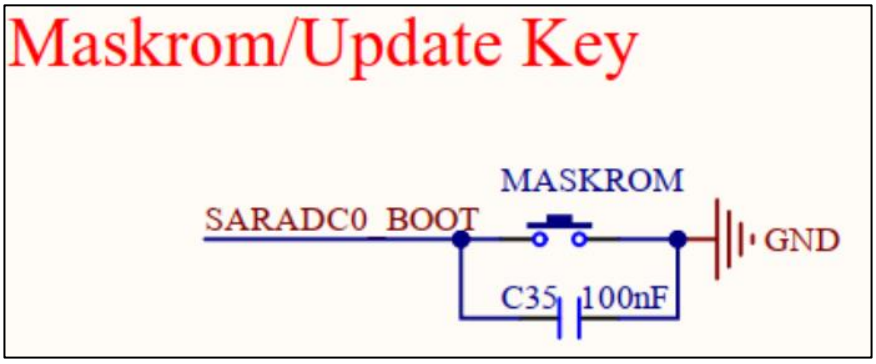

Figure 3.5-3 BOOT Key

This is the MASKROM key. When it is necessary to enter the MASKROM burning mode, press and hold the key to pull down the level of the **SARADC0_BOOT** pin. After powering on in this state, the system will recognize it as **Config1** configuration and enter **USB mode (Maskrom Mode)** for system firmware burning.

3.6 UART Debug Serial Port (System Debugging)

The development board integrates one UART debug serial port with a **USB Type-C** interface. The corresponding schematic diagram is shown below.

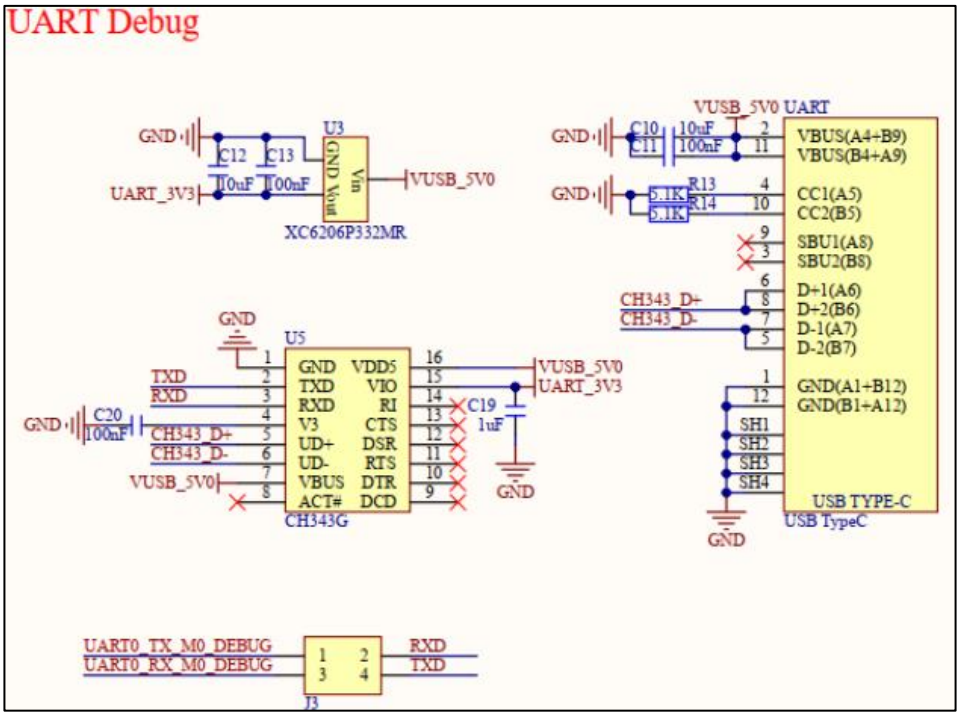

Figure 3.6-1 UART Debug Serial Port

The factory default system uses the two pins **UART0_TX_M0** and **UART0_RX_M0** to input and output system debugging information. It supports serial port log printing for **Linux**, **Android** and other systems, but **does not support debug message output from the heterogeneous Cortex-M0 core**.

For debugging the M0 core, other UART ports need to be configured instead.

The baud rate of the factory default debug serial port is set to **1500000 (1.5 Mbps)**. A serial port chip that supports this baud rate is required for normal communication.

3.7 USB_OTG Interface (System Burning)

The development board is equipped with one USB_OTG interface in USB Type-C form factor, and its schematic diagram is shown in the figure below.

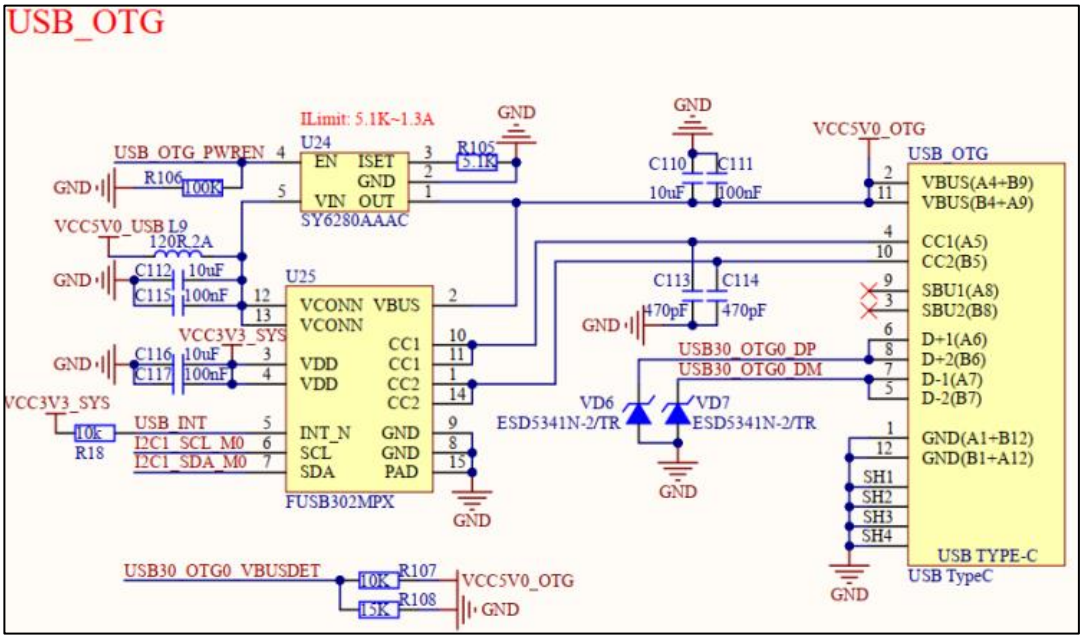

Figure 3.7-1 USB_OTG Interface

The RK3562J processor on the core board supports entering **LOADER** and **MASKROM** upgrade modes for system image firmware burning.

In this circuit, the USB_OTG interface can be used not only as an interface for system image firmware burning, but also connected to USB HOST devices via a USB OTG cable. It supports dual-role switching of **USB host and device**.

In this design, the programmable USB Type-C controller chip **FUSB302MPX** is adopted to implement USB host/device dual-role switching, which is configured and controlled through the I2C interface.

USB is a hot-plug capable device. The interrupt pin **USB_INT** is mainly used to detect device insertion. When a device is connected, this pin is pulled low, and the system driver software enters the corresponding handler to determine the host or device status.

When the processor recognizes that it is in **Host mode**, it pulls high the **OTG_PWR_CTRL** pin, thereby enabling the current-limit switch chip **SY6280AAAC** to output 5V power supply to external devices.

When the processor recognizes that it is in **Device mode**, it pulls low the **OTG_PWR_CTRL** pin to disable the SY6280AAAC current-limit switch chip, and no 5V power will be output externally.

The pin **USB30_OTG0_VBUSDET** is used for device connection and disconnection detection when USB works as a Device.

The pin **USB30_OTG0_ID** is reserved for OTG function of Micro interface. It is **not required** for Type-C circuits and can be left floating.

3.8 Function Keys (Reset, Sleep/Wake-up, Burning, User)

The development board is equipped with 7 mechanical keys, and the schematic diagram is shown in the figure below.

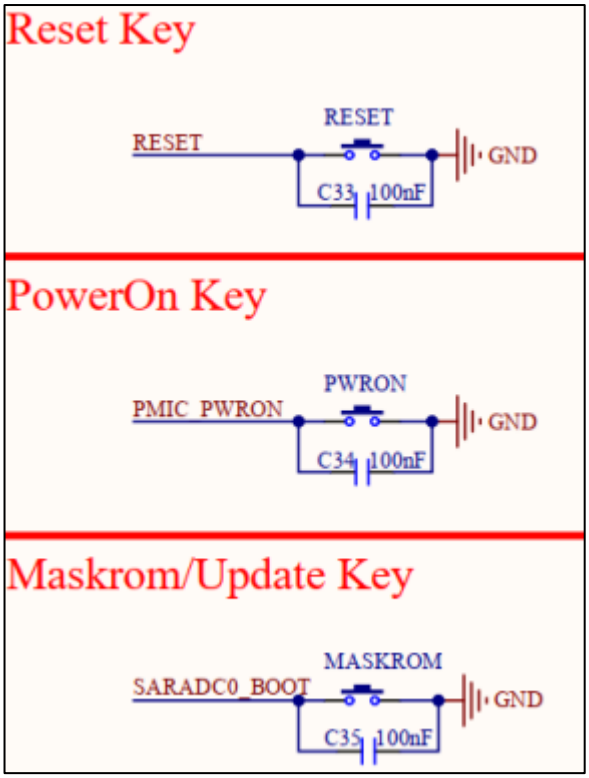

Figure 3.8-1 System Keys

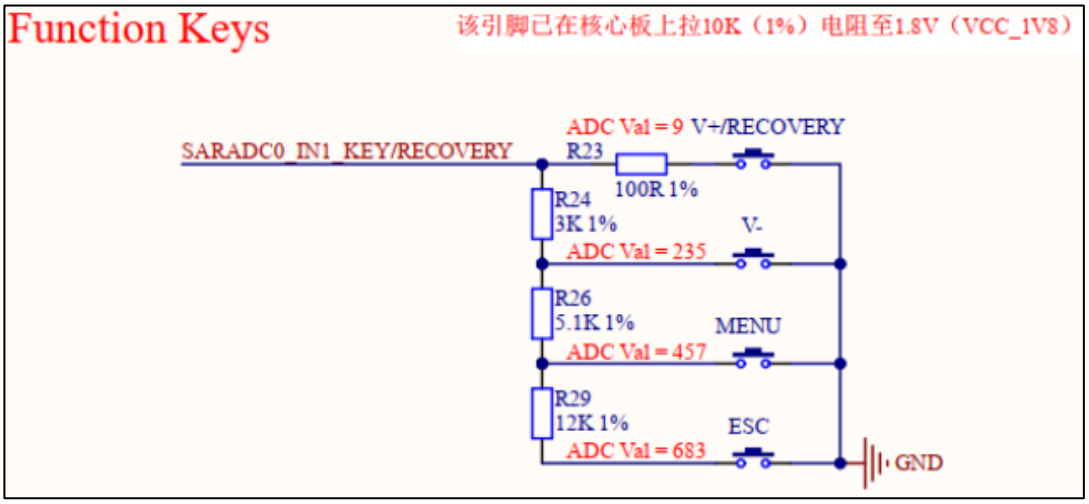

Figure 3.8-2 User Keys

The seven mechanical function keys on the development board are divided into two types: **system keys** and **user keys**.

The system keys include three buttons: **RESET**, **PWRON** and **MASKROM**, which correspond to reset, power on/off (sleep and wake-up), and system burning functions respectively. These three system keys are commonly used. It is recommended that users retain this functional design when designing a custom baseboard.

The user keys consist of four buttons: **V+/RECOVERY**, **V-**, **MENU** and **ESC**. Users can customize their corresponding functions in the software system, such as volume up, volume down, menu and exit.

Among them, the **V+/RECOVERY** key can be used to enter the **LOADER burning mode**. This mode is only available if the system has already been flashed into the core board; otherwise, the **MASKROM mode** must be used for full system flashing. This function is optional and can be configured according to actual needs.

As shown in the schematic, the four user keys are implemented through a single ADC channel pin: **SARADC0_IN1_KEY/RECOVERY**. Pressing different keys generates different collected ADC values, which are used to distinguish the pressed key.

Note that this pin is already pulled up to 1.8V via a **10kΩ (1% tolerance)** resistor on the core board, so no additional pull-up resistor is required on the baseboard.

Adopting ADC key detection can save GPIO resources. Otherwise, four independent GPIOs would be required for the four keys.

The disadvantage of this ADC-based design is that it needs to read the ADC voltage first and judge the pressed key according to different voltage levels.

In contrast, keys directly connected to GPIO only need to detect GPIO high/low levels to determine key press and release status.

3.9 LED Indicator

The development board is equipped with one power indicator LED and one user indicator LED, which are used to indicate the power supply status and system running status of the development board. The schematic diagram is shown in the figure below.

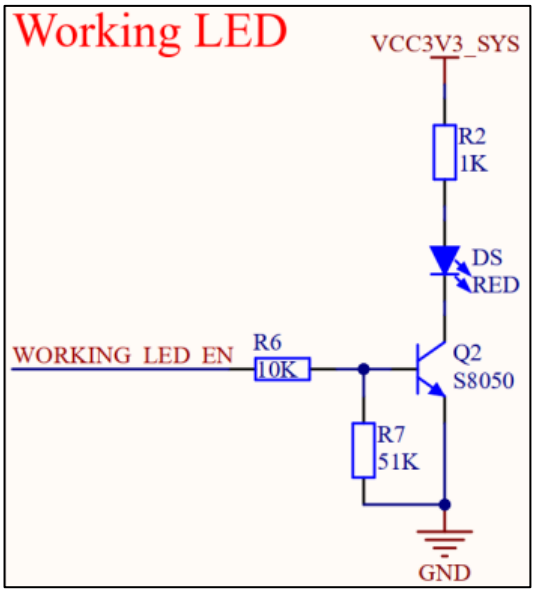

Figure 3.9-1 User Indicator LED

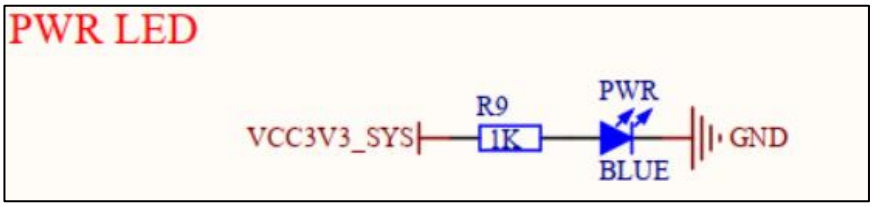

Figure 3.9-2 Power Indicator LED

The user indicator LED is red, and its on/off state is controlled by the high and low level of GPIO signals.

The triode **Q2** is mainly used for level matching of the control pin, enabling the LED to be controlled by either **1.8V** or **3.3V** IO voltage domain.

PWR is the power indicator LED in blue. It keeps steadily on when the 3.3V power supply of the development board works normally.

3.10 Hardware Version Configuration

The development board is equipped with a circuit for hardware version ID configuration, and its schematic diagram is shown in the figure below.

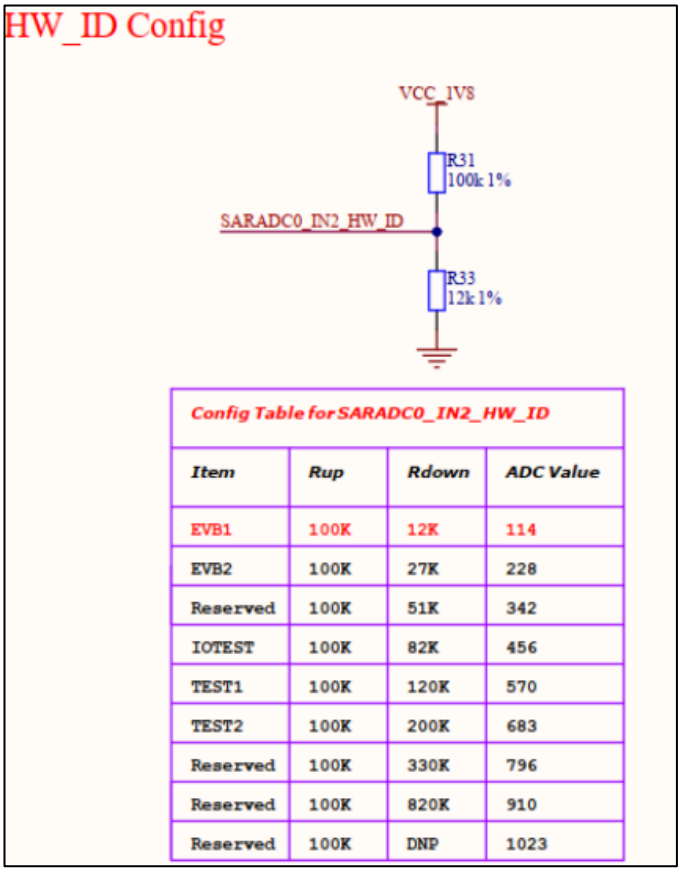

Config Table for SARADC0_IN2_HW_ID

Item	Rup	Rdown	ADC Value
EVB1	100K	12K	114
EVB2	100K	27K	228
Reserved	100K	51K	342
IOTEST	100K	82K	456
TEST1	100K	120K	570
TEST2	100K	200K	683
Reserved	100K	330K	796
Reserved	100K	820K	910
Reserved	100K	DNP	1023

Figure 3.10-1 Hardware Version ID Configuration

This circuit collects the voltage of the voltage dividing resistors through ADC. Different hardware versions are distinguished by configuring different resistor values. This function is not mandatory, and users can apply it to their products according to actual needs.

3.11 Fan Interface

The development board is equipped with one fan interface as a reserved heat dissipation option, which can be connected to a cooling fan. The schematic diagram is shown in the figure below.

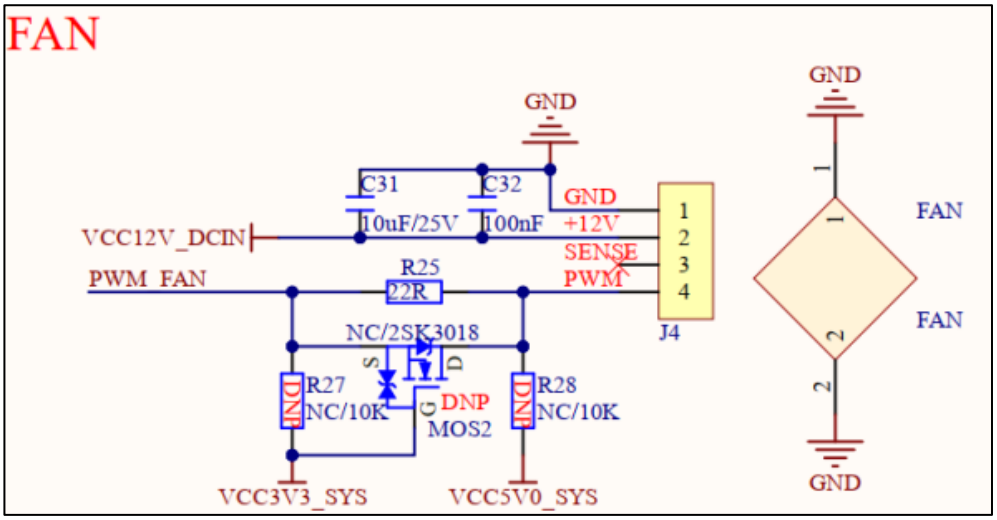

Figure 3.11-1 Fan Interface

J4 in the figure is a 4PIN fan interface, which can be connected to the cooling fan of ALIENTEK (purchased separately).

This fan is equipped with a **PWM speed regulation interface**, which can dynamically adjust the fan speed according to the system load.

This function is optional, and users can adopt it in product design as required.

3.12 Adjustable Potentiometer

The development board is equipped with one adjustable potentiometer for ADC voltage acquisition. The schematic diagram is shown in the figure below.

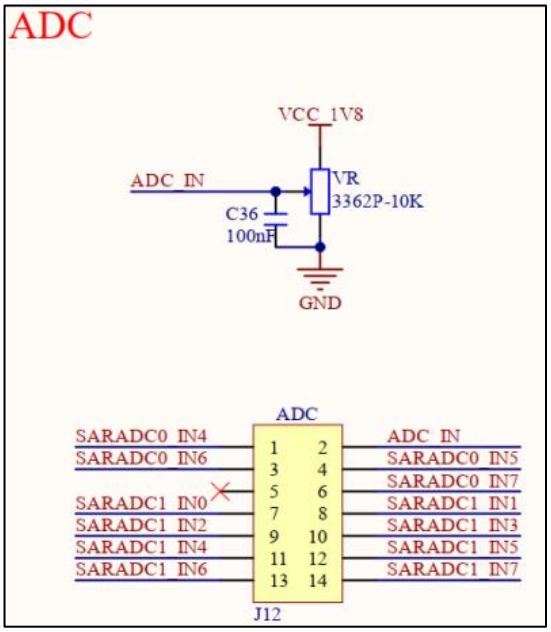

Figure 3.12-1 Adjustable Potentiometer

VR in the figure is a **10kΩ adjustable potentiometer** powered by 1.8V. **ADC_IN** is the ADC sampling pin. Through the J12 pin header group, it is connected to different ADC channels of the RK3562J processor for voltage acquisition.

Note that the maximum sampling voltage of the ADC pin is **1.8V**, which must not be exceeded.

3.13 RS232 Interface

The development board integrates two RS232 interfaces. The schematic diagram is shown in the figure below.

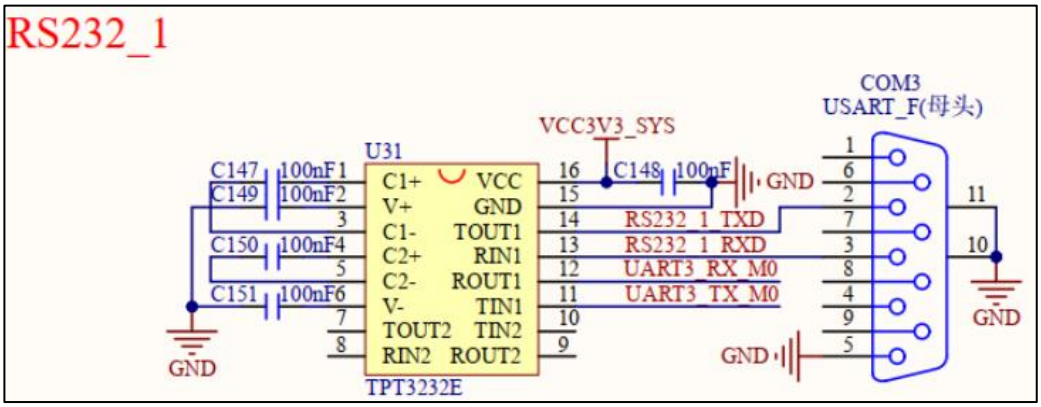

Figure 3.13-1 RS232_1 interface

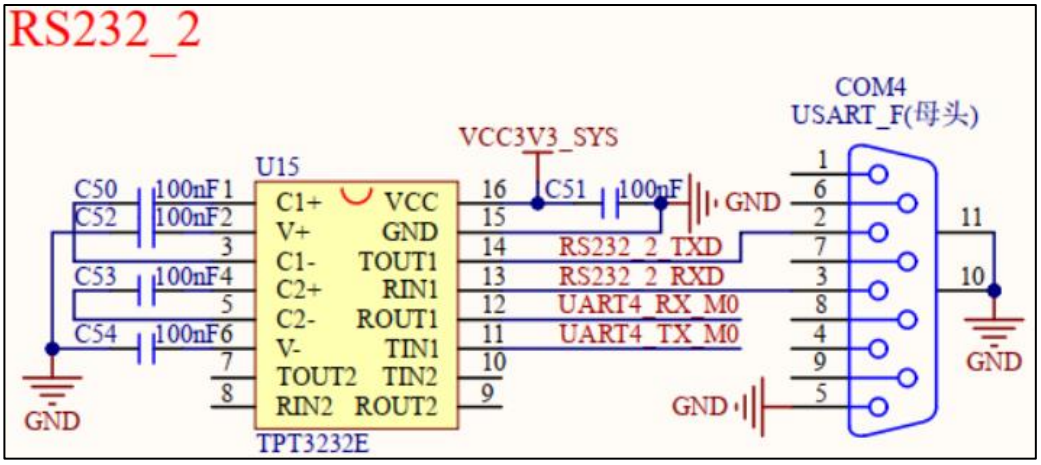

Figure 3.13-2 RS232_2 interface

The development board uses two serial ports, **UART3** and **UART4**, to implement RS232 interface communication via the **TPT3232E** chip. It adopts a standard **DB9 female connector** for connecting external communication cables. Different models of RS232 chips support different performance parameters such as baud rate range. Users shall select the appropriate RS232 chip model according to practical application requirements.

3.14 RS485 Interface

The development board is equipped with 2-channel RS485 interfaces. The schematic diagram is shown in the figure below.

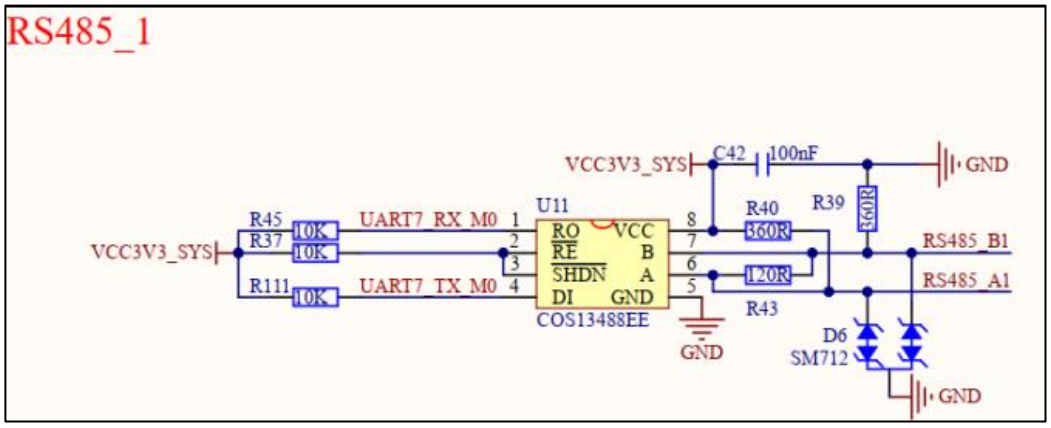

Figure 3.14-1 RS485_1 interface

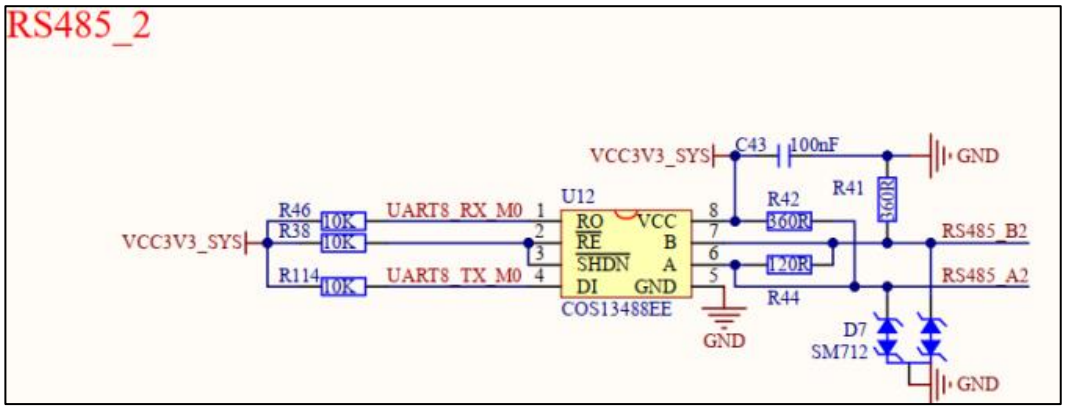

Figure 3.14-2 RS485_2 interface

The development board uses two serial ports, **UART7** and **UART8**, to realize RS485 interface communication via the **COS13488EE** chip.

This chip integrates an internal RS485 automatic transceiving circuit, so there is no need to design an additional transmit/receive control circuit on the peripheral side, which greatly simplifies the peripheral transceiving control circuit of RS485.

A **120Ω** terminal resistor is reserved at the rear end of the interface for use as required.

Different models of RS485 chips support different performance parameters such as baud rate range. Users shall select the RS485 chip model according to actual application scenarios.

3.15 CAN Interface

The development board is equipped with 2-channel CAN interfaces. The schematic diagram is shown in the figure below.

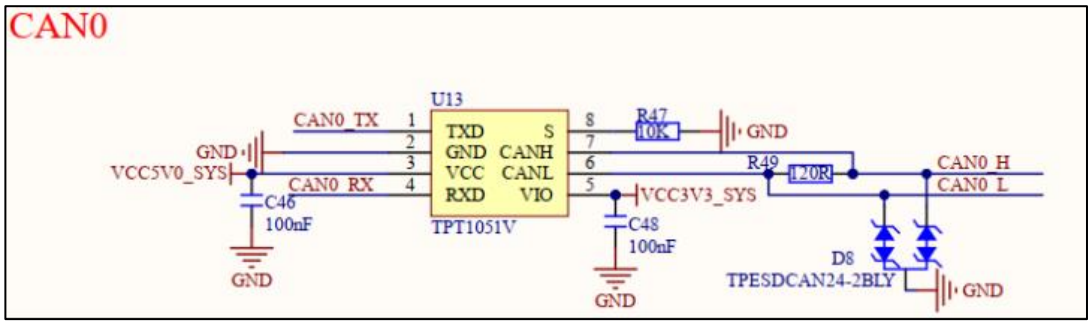

Figure 3.15-1 CAN0 interface

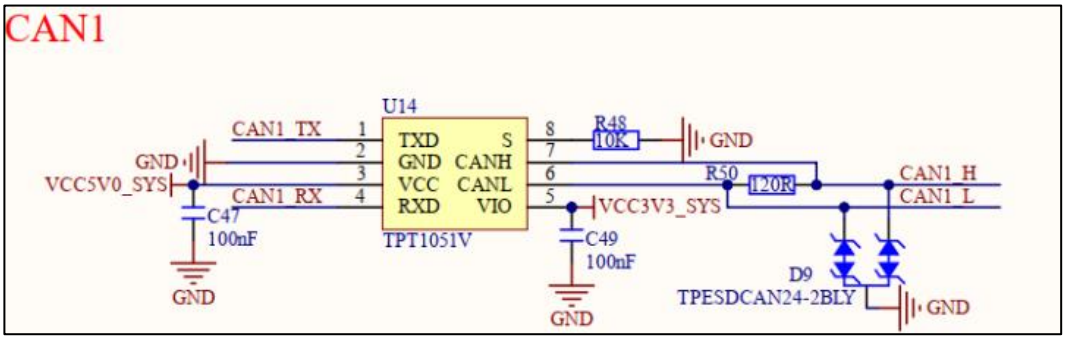

Figure 3.15-2 CAN1 interface

The development board adopts the CAN bus transceiver chip **TPT1051T** to implement CAN interface communication. This chip also supports the **CAN FD** protocol. However, since the **RK3562J** processor does not support CAN FD, only standard CAN communication can be used.

A **120Ω** terminal resistor is preset at the interface end and can be enabled as required. Different models of CAN chips feature different performance parameters; users shall select the appropriate CAN chip model according to actual application requirements.

The 2-channel CAN interfaces and 2-channel RS485 interfaces are led out through **8PIN pluggable terminal blocks**.

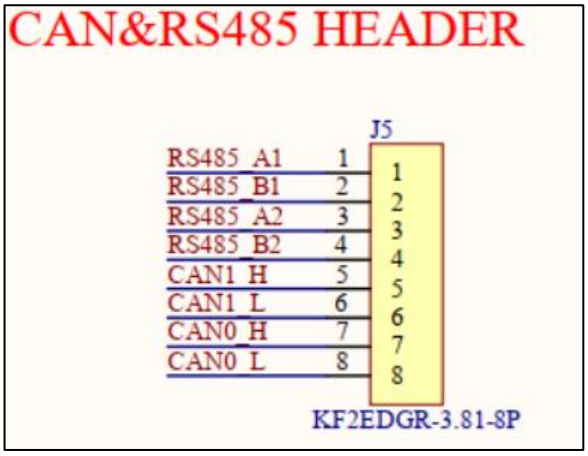

Figure 3.15-3 CAN & RS485 Interface Terminal

3.16 RTC Clock Circuit

The development board adopts an external RTC real-time clock chip AT8563T to implement the external RTC timing function. The timing clock tick is generated by a 32.768kHz passive crystal

oscillator. The RTC chip communicates via the I2C bus, and the I2C clock and data lines need to be pulled up to 3.3V through resistors.

This circuit adopts a dual power supply mode to realize uninterrupted power supply for the RTC chip, with power switching between the onboard 3.3V power supply and a 3V CR1220 button battery.

When the onboard 3.3V power supply is normal, the CR1220 button battery will not supply power to the RTC chip; when the onboard 3.3V power is cut off, the CR1220 button battery will supply 3V power to the RTC chip.

In this way, the VDD power supply of the RTC chip is always powered to ensure continuous RTC timekeeping. If strict time accuracy is required, it is recommended to use a crystal oscillator with better specifications to provide an accurate clock source. The schematic diagram is shown in the figure below.

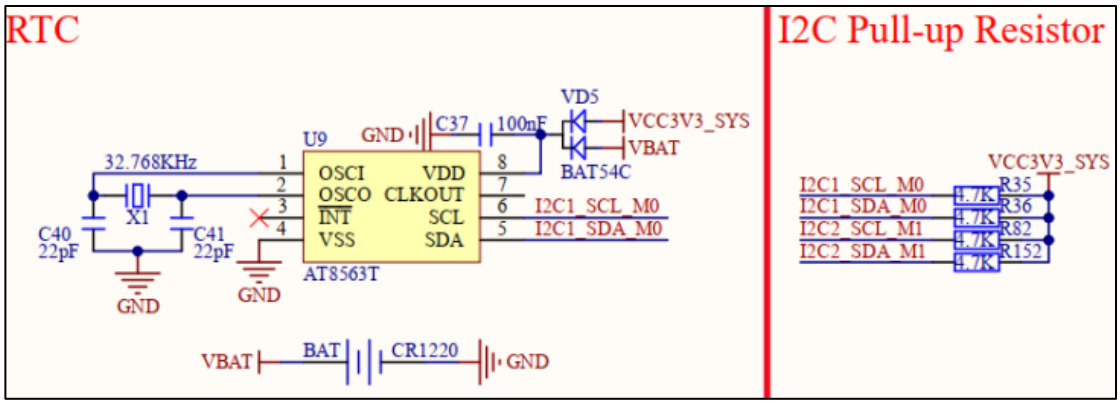

Figure 3.16-1 RTC Clock

3.17 EEPROM Storage

The development board is equipped with an EEPROM memory chip model **AT24C64**, with a capacity of 8KB and an **IIC** interface, which is provided for users to store data and perform testing. The schematic diagram is shown in the figure below.

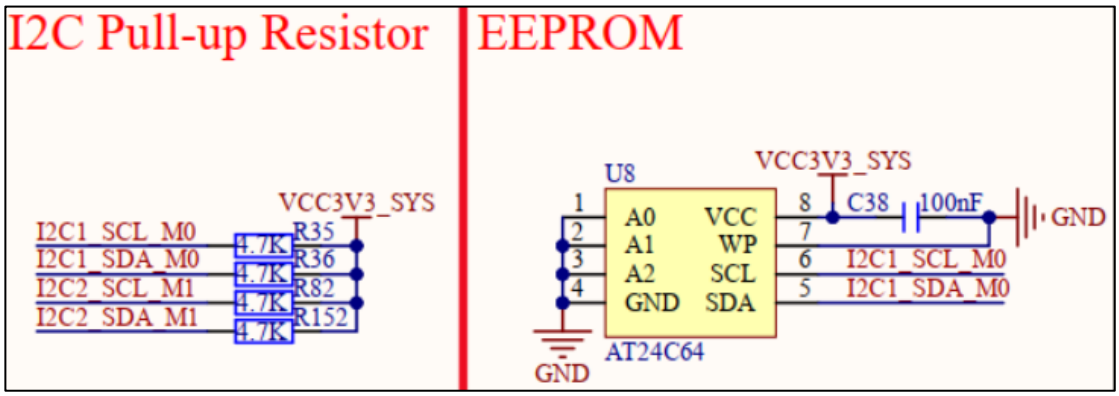

Figure 3.17-1 EEPROM Storage

3.18 SPI NOR FLASH Storage

The development board is equipped with an SPI NOR FLASH memory chip, model **W25Q128**, with a capacity of 16MB and SPI interface, which is provided for users to store data and conduct functional tests.

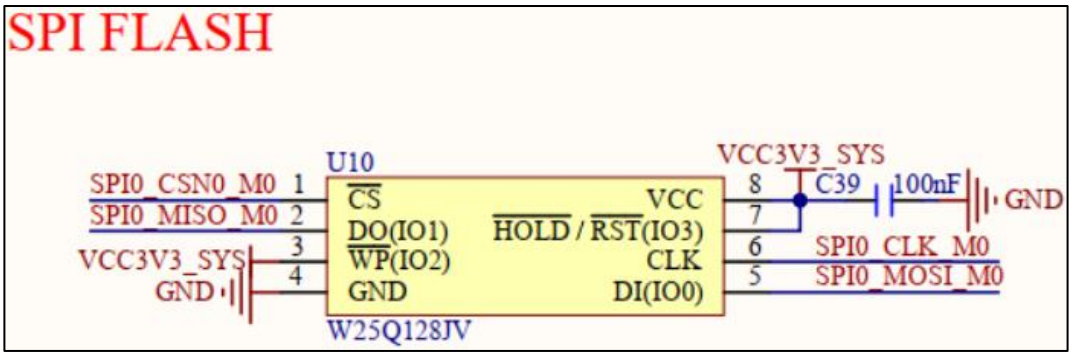

Figure 3.18-1 SPI NOR FLASH Storage

3.19 USB HOST Interface

Through a USB HUB chip, the development board expands one USB bus into four USB HOST interfaces. The schematic diagram is shown in the figure below.

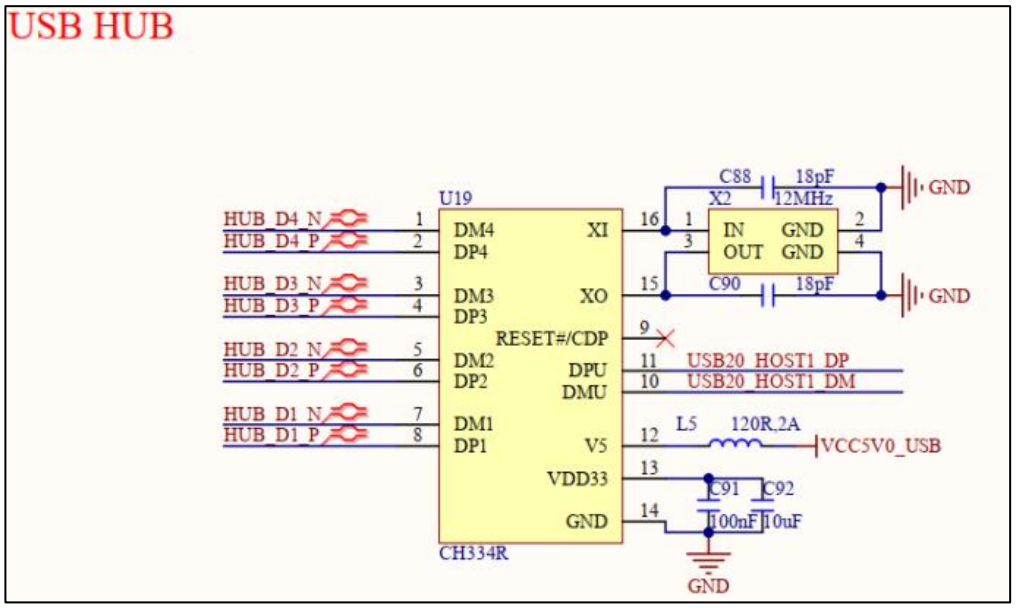

Figure 3.19-1 USB HUB Circuit

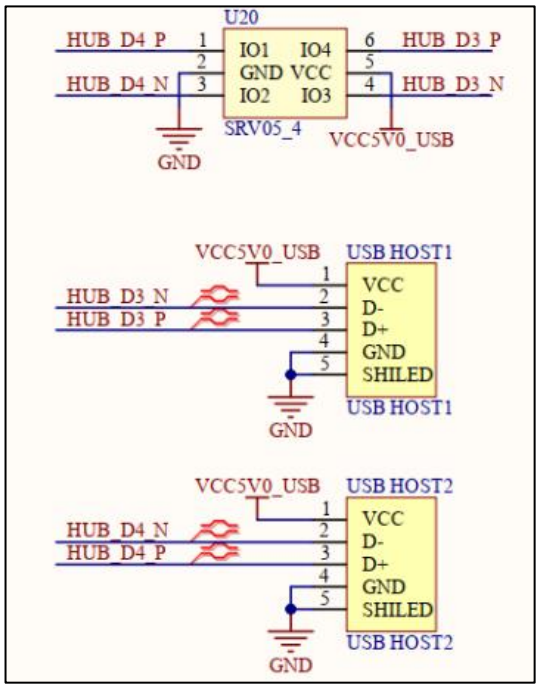

Figure 3.19-2 USB HOST Interface

As shown in the figure, the **CH334R** USB HUB chip manufactured by Nanjing Qinheng is used to expand the **USB20_HOST1 (USB 2.0)** bus into four USB channels.

Among them, the **HUB_D3** and **HUB_D4** interfaces are led out as two external HOST interfaces: **USB HOST1** and **USB HOST2**. These interfaces output 5V power supply externally and can be connected to peripherals such as USB flash drives, USB mice, USB keyboards, and USB cameras.

HUB_D1 and **HUB_D2** are connected to the **USB Wi-Fi & Bluetooth module** and **4G module** respectively.

3.20 Wi-Fi & Bluetooth Interface

The development board is equipped with one Wi-Fi antenna interface and one Bluetooth antenna interface. The schematic diagram is shown in the figure below.

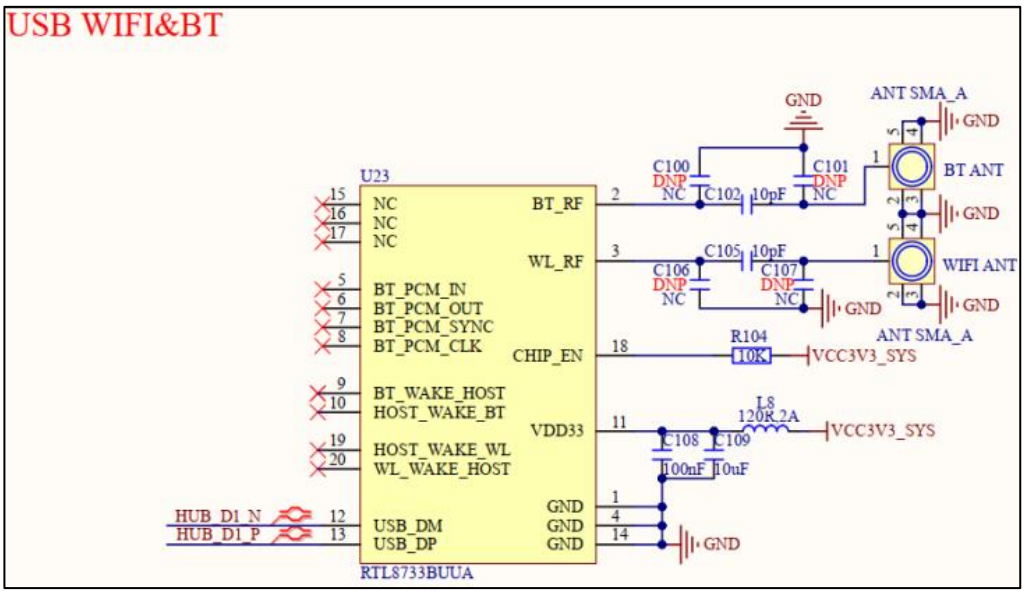

Figure 3.20-1 Wi-Fi and Bluetooth Module

The development board adopts an integrated **Wi-Fi & Bluetooth combo module** to provide Wi-Fi and Bluetooth wireless connectivity functions. The module model is **TL8733BUUA** from Chuanglink Intelligent Connection. It uses the **RTL8733BU** chip manufactured by REALTEK, features a **USB 2.0** interface, and supports **Wi-Fi 4** dual-band 2.4G/5.8G as well as **Bluetooth 5.2** protocol.

The module supports dual-antenna configuration and also allows Wi-Fi and Bluetooth to share a single antenna. The development board adopts a **dual independent antenna design**, with separate antennas for Wi-Fi and Bluetooth respectively.

In addition, since the module supports 5.8G Wi-Fi band, it is recommended to use a **2.4G/5.8G dual-band antenna** for Wi-Fi, while Bluetooth adopts a dedicated 2.4G band antenna.

3.21 TF Card Interface

The development board is equipped with one TF Card interface for connecting a TF card to expand external storage. The schematic diagram is shown in the figure below.

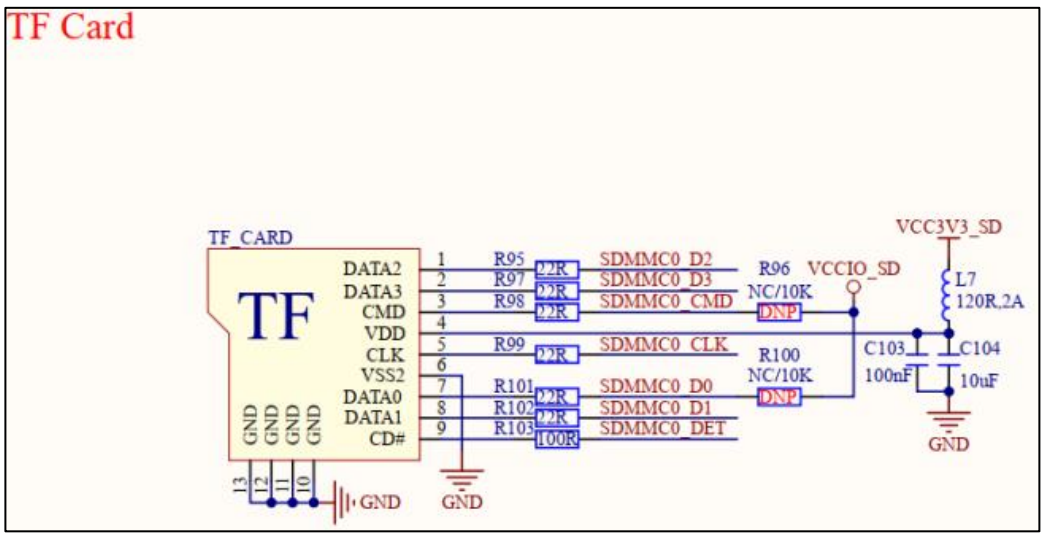

Figure 3.21-1 TF Card Interface

This interface adopts the **SDMMC0** bus for communication. It consists of the **SDMMC0_CMD** control line, **SDMMC0_CLK** clock line, four data lines **SDMMC0_D0 ~ SDMMC0_D3**, and the card insertion/removal detection line **SDMMC0_DET**.

The TF card is powered by **VCC3V3_SD**, a dedicated SD card power supply output from the core board power management chip **RK809-5**. The communication signals are pulled up by the dedicated SD card signal power supply **VCCIO_SD**, which is designed according to actual requirements.

3.22 PCIE Interface

The development board integrates one **PCIE 2.0** interface for expanding PCIE peripheral devices. The schematic diagram is shown in the figure below.

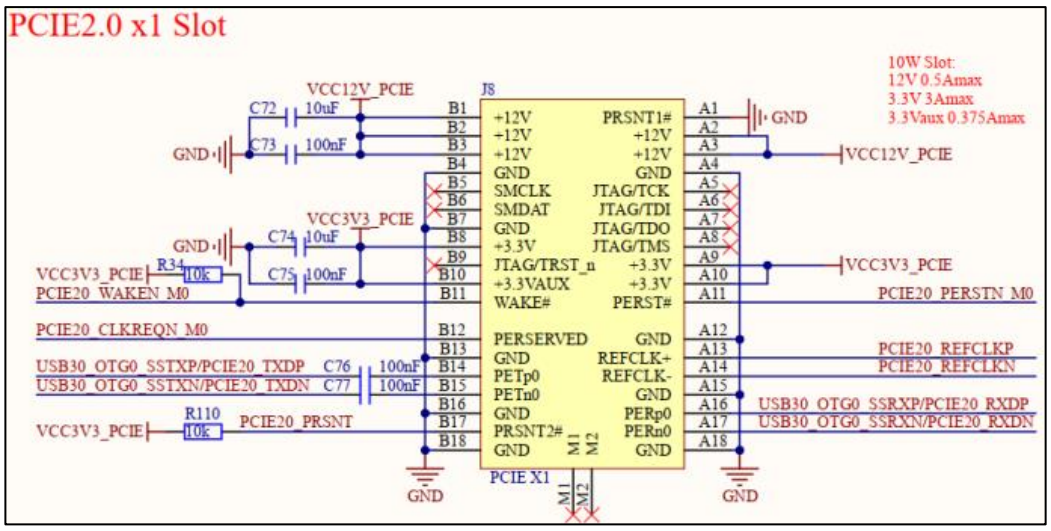

Figure 3.22-1 PCIE Interface Slot

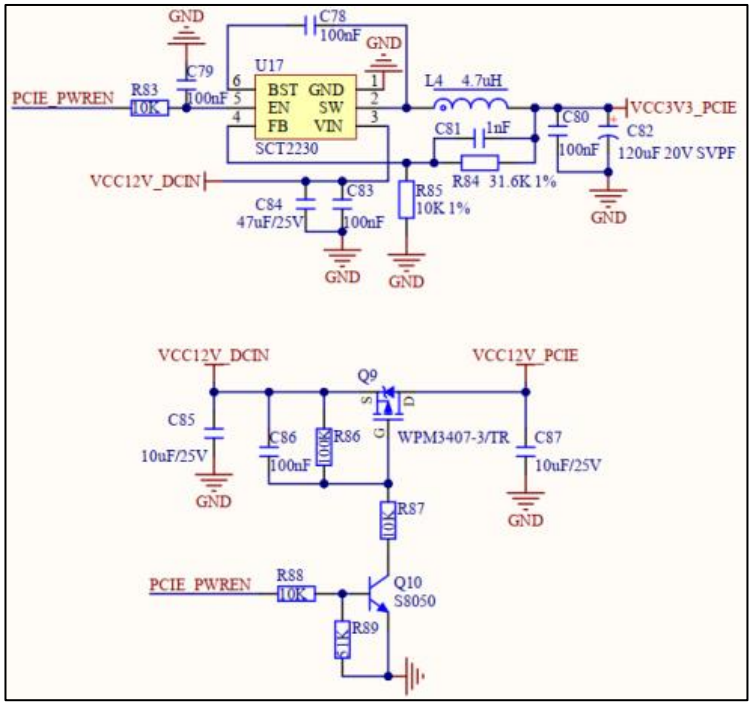

Figure 3.22-2 PCIE Power Supply

The development board adopts a standard **36Pin PCIe ×1 slot** to provide a PCIe 2.0 interface. This interface outputs **12V** and **3.3V** power to supply power for external devices.

The PCIe power supply is controlled by dedicated control pins. Power will be supplied only when a PCIe device is properly connected.

3.23 Audio Interface

The development board is equipped with one speaker interface, one headphone interface and one microphone interface. The schematic diagram is shown in the figure below.

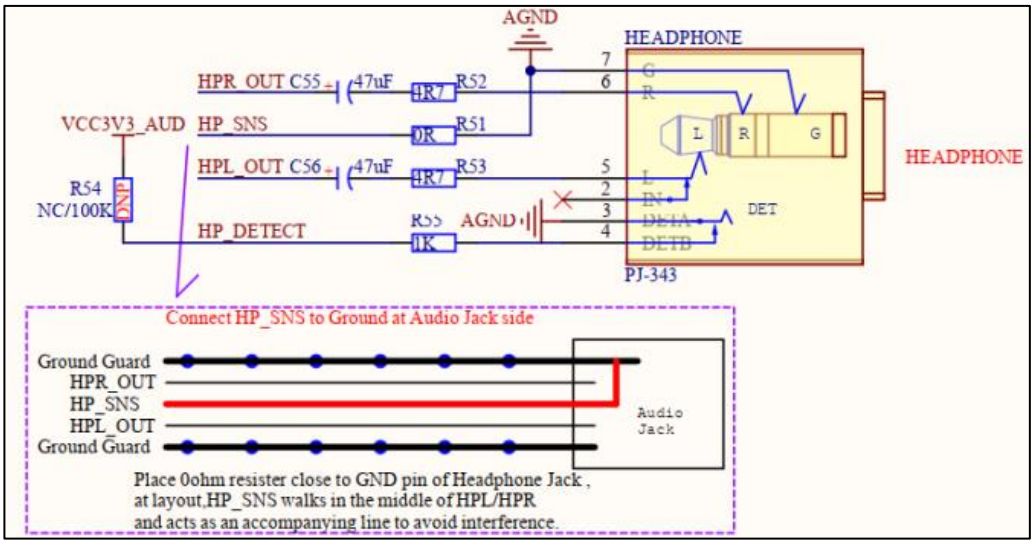

Figure 3.23-1 Headphone Interface

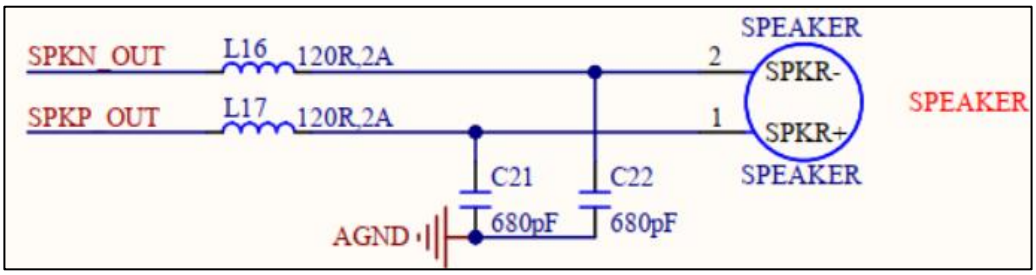

Figure 3.23-2 Speaker Interface

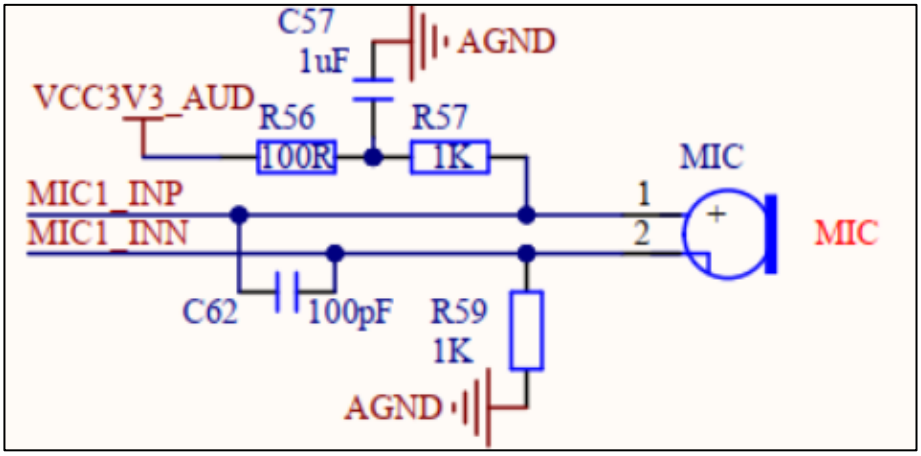

Figure 3.23-3 Microphone Interface

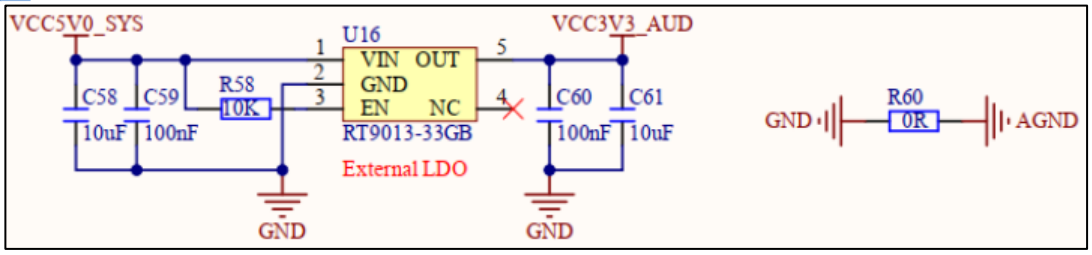

Figure 3.23-4 Microphone Bias Power Supply

3.24 MIPI DSI Interface

The development board is equipped with one 4-lane MIPI DSI interface, which is used to connect MIPI DSI display screens. The schematic diagram is shown in the figure below.

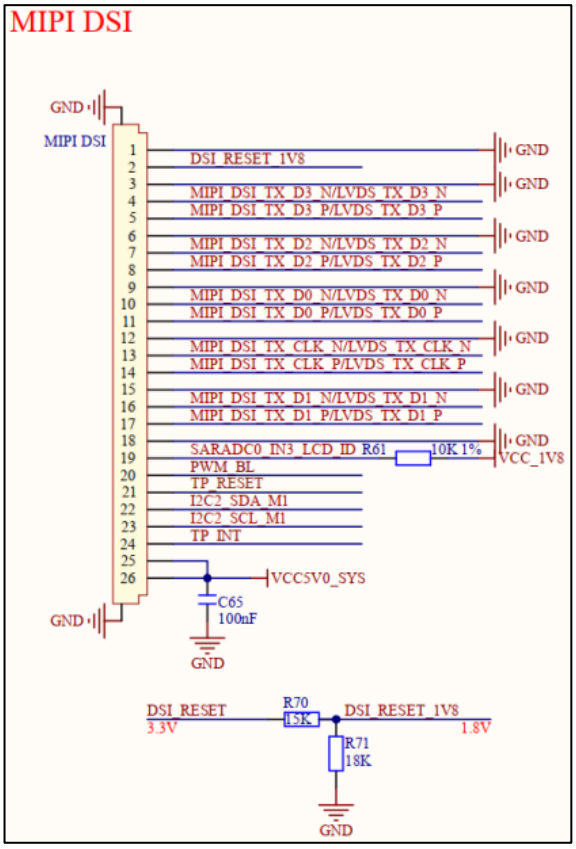

Figure 3.24-1 MIPI DSI Interface

The development board uses a **26PIN FPC connector** to lead out one 4-lane MIPI DSI display interface, which supports I2C interface touch function.

This interface is compatible with **ALIENTEK MIPI LCD touch screens**, and has been adapted to MIPI DSI screens with resolutions including 5.5-inch 720×1280, 5.5-inch 1080×1920, and 10.1-inch 800×1280.

The signals **MIPI_DSI_TX_D0, MIPI_DSI_TX_D1, MIPI_DSI_TX_D2, MIPI_DSI_TX_D3** and **MIPI_DSI_TX_CLK** are the differential pairs for MIPI DSI data and clock respectively.

PWM_BL serves as the backlight control pin of the MIPI DSI screen.

TP_INT, TP_RESET, I2C2_SDA_M1 and **I2C2_SCL_M1** are the interrupt, reset and I2C communication pins of the touch chip respectively.

The signal **SARADC0_IN3_LCD_ID** is an ADC voltage sampling pin for identifying ALIENTEK MIPI screen ID.

ALIENTEK MIPI screens come in different sizes and resolutions. On the screen side, pull-up and pull-down resistors with 1% accuracy generate different voltage levels as the screen ID code (the screen ID adopts 1.8V resistor voltage division; refer to the screen schematic for details), which is used to distinguish screens of different resolutions and sizes.

Therefore, the **SARADC0_IN3_LCD_ID** pin adopts the ADC function to sample the screen ID voltage.

The **DSI_RESET** signal is the display reset pin. ALIENTEK MIPI screens require this pin to operate at **1.8V logic level**. For this reason, a 3.3V to 1.8V level conversion circuit is added to convert the DSI_RESET reset signal to 1.8V level.

Please note that in this interface design, the **SARADC0_IN3_LCD_ID** pin is internally pulled up to 1.8V via a **10kΩ resistor with 1% precision** by default. When no screen is connected to the development board, the ADC sampled voltage of the SARADC0_IN3_LCD_ID pin defaults to 1.8V.

This pull-up resistor will be in parallel with the ID voltage divider resistors built into ALIENTEK MIPI screens, which will affect the original resistor division voltage of the screen ID after the screen is connected. Therefore, the final screen ID voltage cannot only refer to the inherent ID voltage of the screen itself, but shall be determined comprehensively by combining the different design schemes of the interface circuit.

If screens of other brands do not adopt the ID identification design, this pin function is unnecessary and can be left unconnected.

3.25 LVDS Interface

The development board is equipped with one **4-lane LVDS** interface for connecting LVDS display screens. The schematic diagram is shown in the figure below.

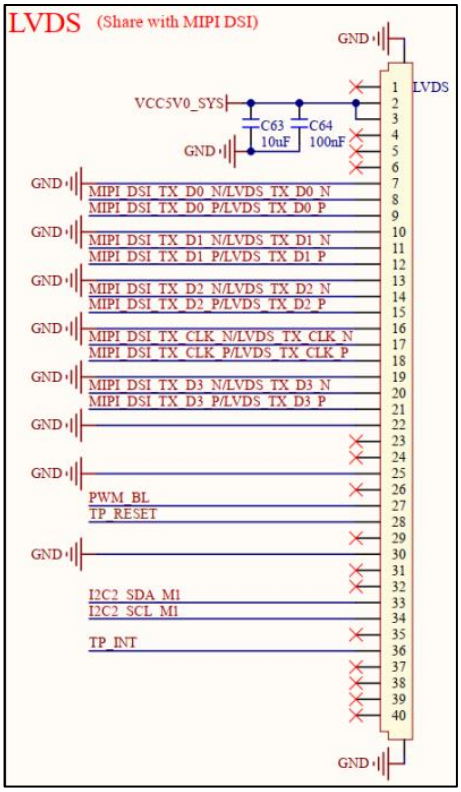

Figure 3.25-1 LVDS Interface

The LVDS interface shares the same hardware channel with the MIPI DSI interface. They cannot be used to connect display screens simultaneously, and only one of them can be selected for use.

This LVDS interface is compatible with ALIENTEK LVDS LCD touch screens, and it has been adapted to support 10.1-inch LVDS screens with a resolution of 1280×800.

3.26 MIPI CSI Interface

The development board is equipped with 2-channel MIPI CSI interfaces, which are used to connect two MIPI CSI cameras. The schematic diagram is shown in the figure below.

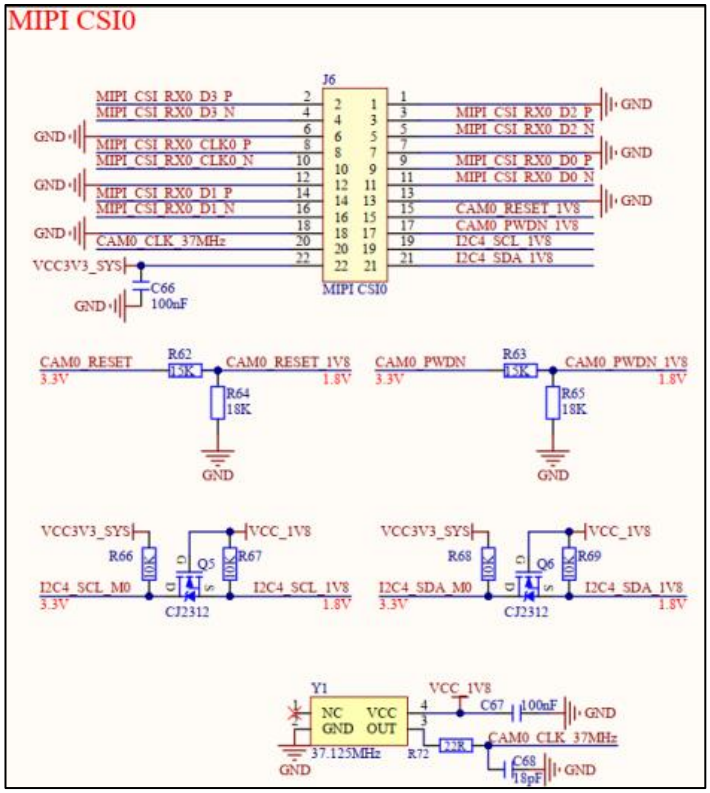

Figure 3.26-1 MIPI CSI0 interface

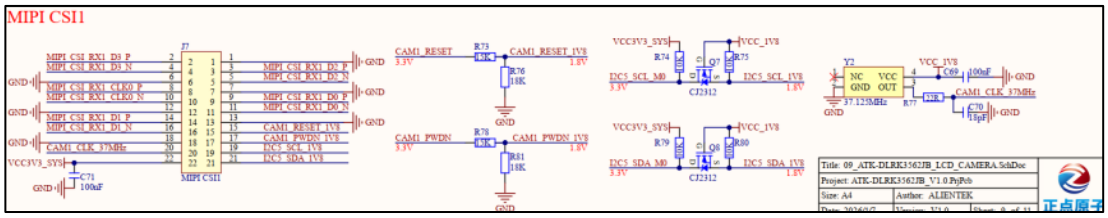

Figure 3.26-2 MIPI CSI1 interface

The development board adopts two **2×11P pin headers with 2.0mm pitch** to lead out two 4-lane MIPI CSI camera interfaces. It supports MIPI CSI cameras with built-in ISP (13M pixel) for image acquisition and processing.

This interface is compatible with **ALIENTEK IMX335 and IMX415 camera modules**. The camera modules can be plugged into this interface with the lens facing outward.

The control pins and I2C pins of ALIENTEK IMX335 and IMX415 camera modules operate at **1.8V**. Therefore, this circuit performs **3.3V to 1.8V level conversion** for four pins:

CAMx_RESET, CAMx_PWDN, I2Cx_SCL_M0 and I2Cx_SDA_M0.

When the ALIENTEK IMX335 and IMX415 camera modules work in four-data-lane mode, an external **37.125MHz** clock is required. This circuit adopts a **1.8V active crystal oscillator** to provide the 37.125MHz clock signal.

3.27 100Mbps Ethernet Interface

The development board is equipped with one **100Mbps Ethernet interface**. The schematic diagram is shown in the figure below.

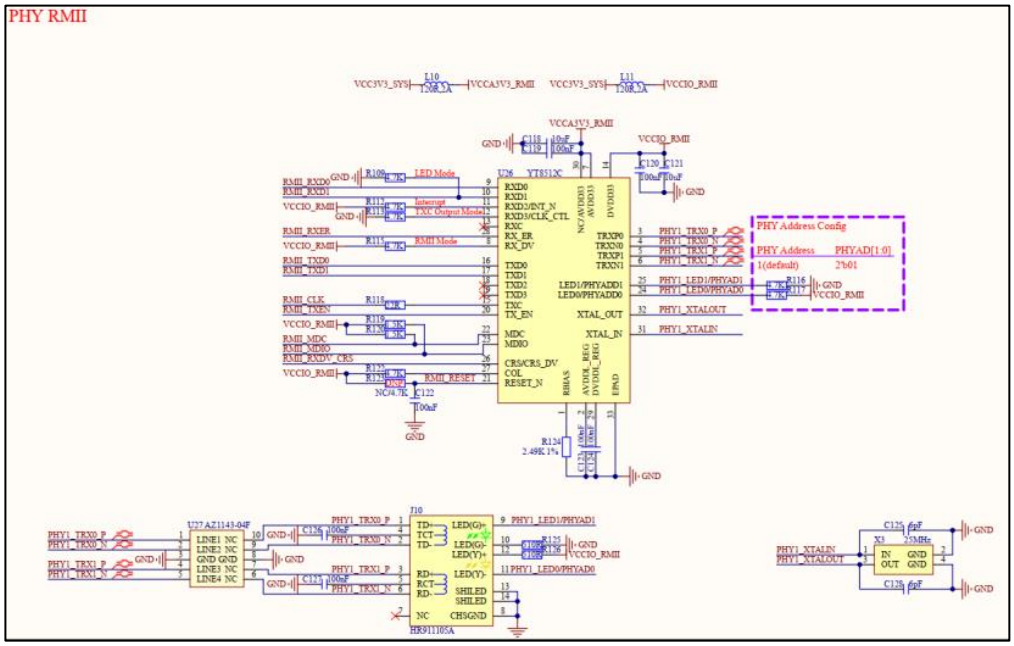

Figure 3.27-1 100Mbps Ethernet Interface

The development board adopts the domestic PHY chip **YT8512C** to implement the 100Mbps Ethernet interface function, supporting automatic rate adaptation of 10M/100Mbps.

The overall circuit consists of four parts: data receiving, data transmitting, control signals, functional hardware configuration, power supply and external interface. The default PHY address is configured as **0x1**.

3.28 Gigabit Ethernet Interface

The development board is equipped with one Gigabit Ethernet interface. The schematic diagram is shown in the figure below.

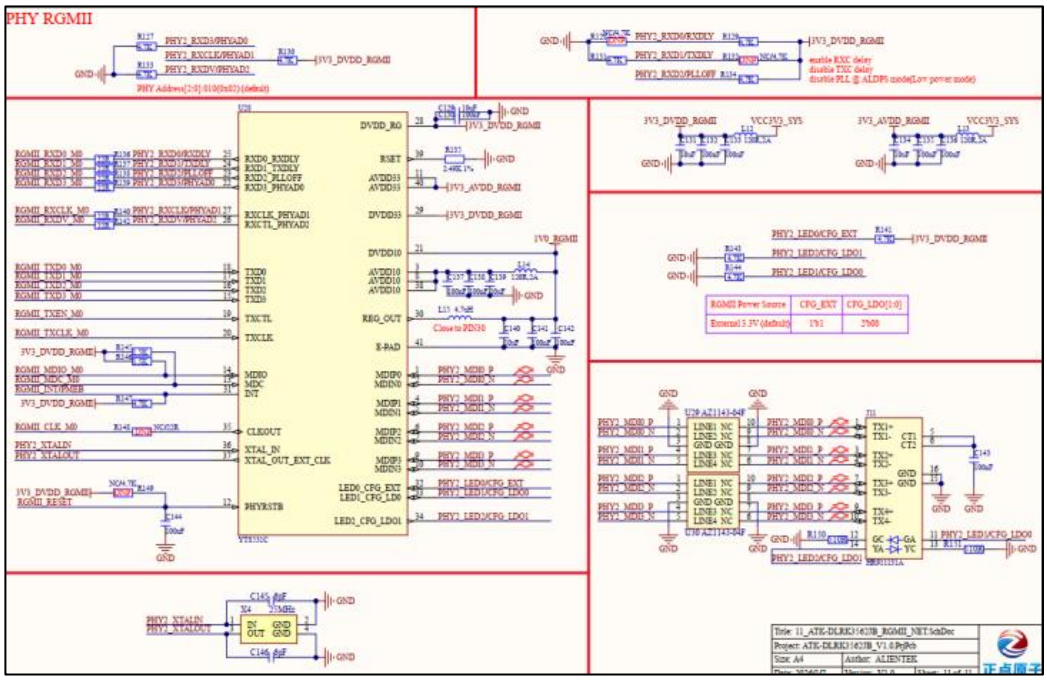

Figure 3.28-1 Gigabit Ethernet Interface

The development board adopts the domestic Ethernet PHY chip **YT8531C** to implement the Gigabit Ethernet interface function, supporting auto-negotiation rates of 10M/100M/1000Mbps.

The circuit is composed of four parts in total: data reception and transmission, control signals, hardware function configuration, power supply, and external interface. The default PHY address is configured as **0x2**.

3.29 Expanded IO Pin Header Group

The development board is onboard with a group of expanded IO pin headers. The schematic diagram is shown in the figure below.

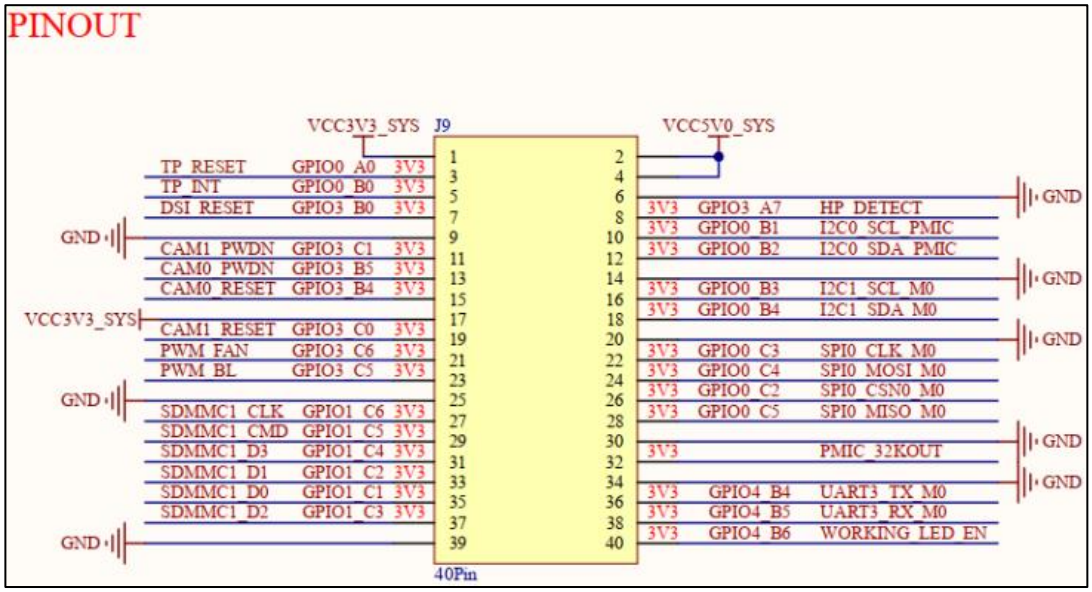

Figure 3.29-1 Expanded IO Pin Header Group

The development board leads out part of the GPIO pins, as well as 5V, 3.3V and GND pins through a set of **40PIN pin headers with 2.54mm pitch**.

Users can utilize these GPIO pins to connect other peripheral modules for more innovative application development. It should be specially noted that these expanded GPIO ports are not independently available; almost all of them are **multiplexed with the pins of the on-board functional circuits** of the development board.

Therefore, when using these led-out GPIOs, users need to check the configuration of the baseboard functional circuits corresponding to these pins, such as whether pull-up/pull-down resistors are configured, whether capacitors are connected in parallel, and whether the pins have been occupied by software programs. If the on-board circuit configuration affects normal use, relevant circuits shall be modified or removed accordingly.

For example, the pins **UART3_TX_M0** and **UART3_RX_M0** are default configured for the RS232 interface on the development board. Hence, if users need to use these two pins for other functions, the RS232 interface cannot be used simultaneously, and only then can UART3_TX_M0 and UART3_RX_M0 be reused for other purposes.

Chapter 4. Precautions for Using the Development Board

To help users better use the ALIENTEK ATK-DLRK3562JB development board, the following precautions are provided. Please pay close attention during use to avoid unnecessary problems.

(1) When you intend to configure any IO pin for other functions, please first refer to the development board schematic to check whether the IO pin is connected to any on-board peripheral and whether it will cause functional interference. Only use the IO pin after confirming there is no interference.

(2) If the LCD screen displays a pure white screen, first check whether the screen FPC cable is properly inserted and whether the cable direction is correct (you can unplug and reinsert it for testing). Also check whether the contacts of the FPC connector are damaged.

(3) When removing the core board from the baseboard, plug and unplug it strictly along the direction marked by the arrow on the core board.

(4) The camera module, 4G module, LVDS screen, MIPI screen and PCIE module do not support hot swapping. Please connect the corresponding modules first before powering on the development board.

(5) The development board is officially matched with a 12V DC power supply by default. It is not recommended to replace it with a power supply of other voltage specifications. For example, the PCIE slot on the development board requires 12V power supply for external peripherals. Using an incorrect supply voltage may lead to abnormal operation.

If you have any questions during the use of the ATK-DLRK3562JB development board, you may contact ALIENTEK online technical support to obtain and discuss solutions to technical problems.

This completes the hardware introduction of the ALIENTEK ATK-DLRK3562JB development board. The hardware design scheme of the development board is provided for user reference. Should there be any errors in this manual, please contact us to give feedback for correction.